TYPICAL SECTIONS

SUPERPAVE BITUMINOUS CONCRETE PAVEMENT MIXTURE DESIGN CRITERIA	
DESIGN LANE/DESIGN LIFE ESALS	6,345,000
DESIGN NUMBER OF GYRATIONS	65
PERFORMANCE GRADE ASPHALT BINDER	SEE SECTION 490 OF THE GENERAL SPECIAL PROVISIONS AND SPECIAL PROVISIONS

1.5" SUPERPAVE BITUMINOUS CONCRETE PAVEMENT, TYPE IVS
2" SUPERPAVE BITUMINOUS CONCRETE PAVEMENT, TYPE IIIS
6" SUPERPAVE BITUMINOUS CONCRETE PAVEMENT, TYPE IIS, (2 LIFTS - 3 INCHES PER LIFT)
24" SUBBASE OF DENSE GRADED CRUSHED STONE (DGCS)
24" ~~SAND BORROW~~ DENSE GRADED CRUSHED STONE (DGCS)

SEE TYP 2 FOR MATERIAL TOLERANCES AND TYPICAL SECTION GENERAL NOTES

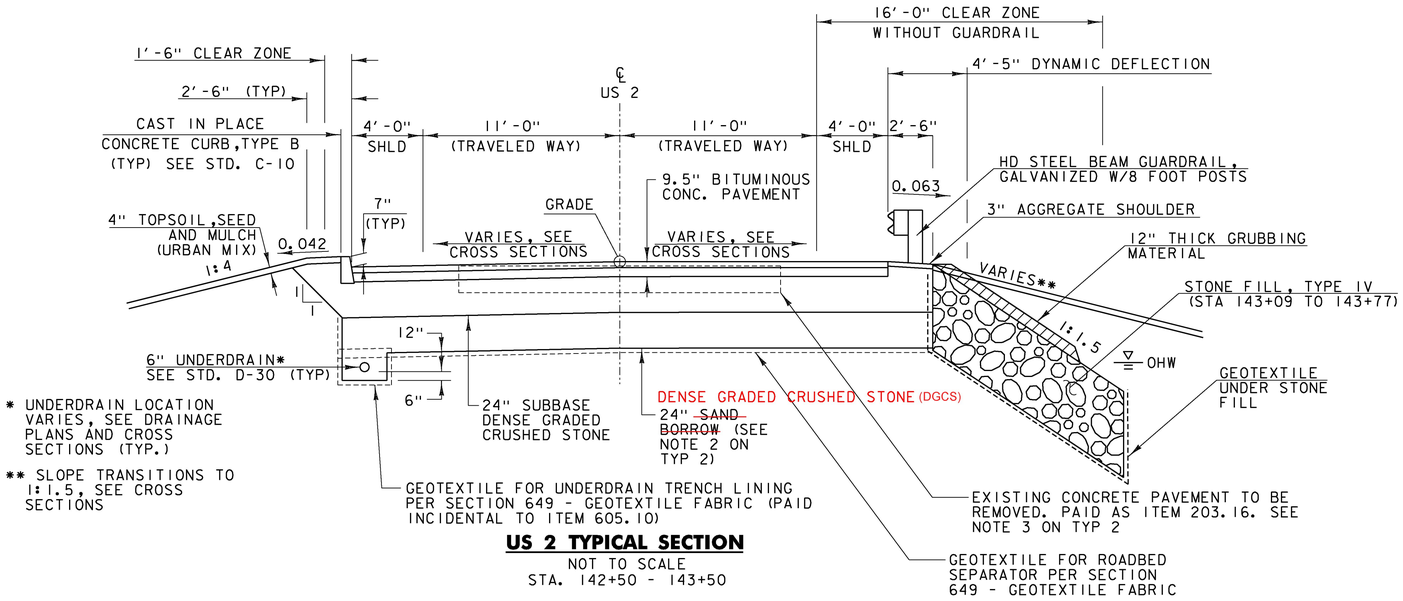

* UNDERDRAIN LOCATION VARIES, SEE DRAINAGE PLANS AND CROSS SECTIONS (TYP.)

** SLOPE TRANSITIONS TO 1:1.5, SEE CROSS SECTIONS

US 2 TYPICAL SECTION
NOT TO SCALE
STA. 142+50 - 143+50

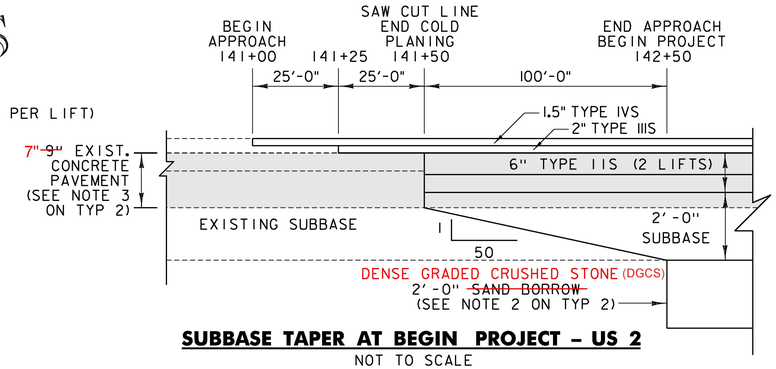

SUBBASE TAPER AT BEGIN PROJECT – US 2
NOT TO SCALE

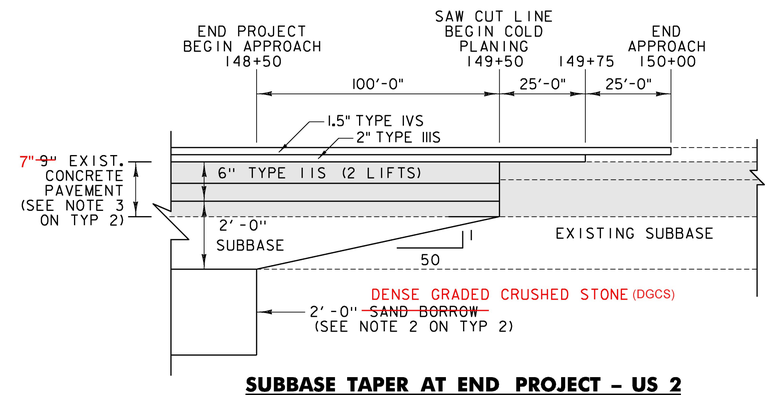

SUBBASE TAPER AT END PROJECT – US 2
NOT TO SCALE

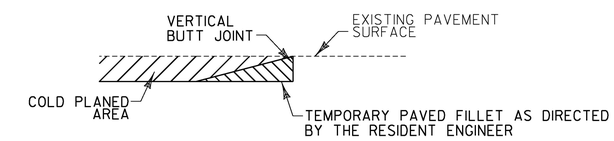

DETAIL AT VERTICAL COLD PLANE JOINTS
NOT TO SCALE

NOTE: ROADWAY FROM STATION 143+50 - 145+00 IS WITHIN THE INTERSECTION AND TYPICAL SECTIONS DO NOT APPLY. SEE GENERAL PLANS AND CROSS SECTIONS FOR DETAILS WITHIN THIS STATION RANGE.

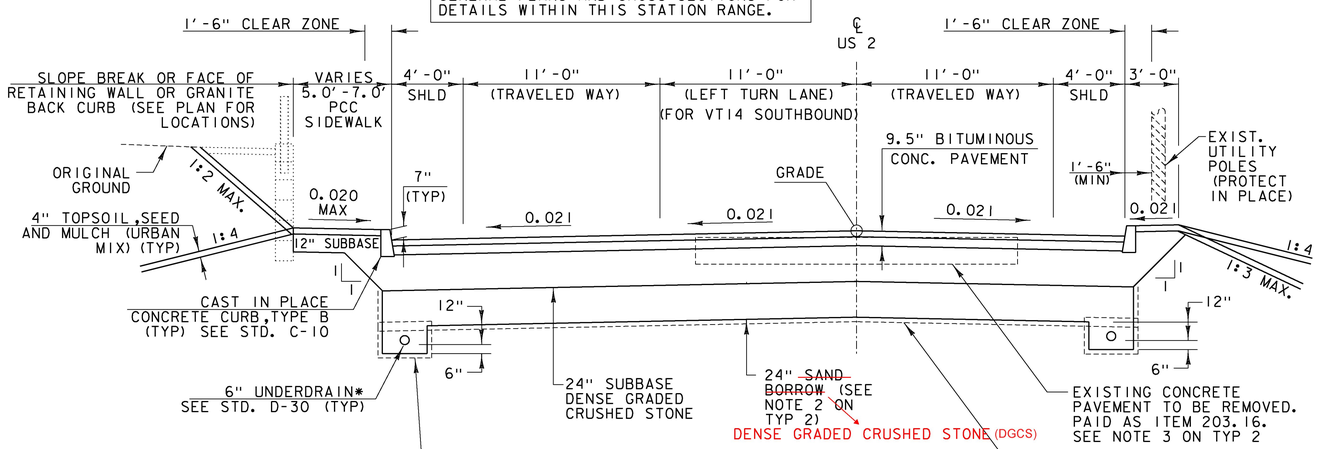

* UNDERDRAIN LOCATION VARIES, SEE DRAINAGE PLANS AND CROSS SECTIONS

US 2 TYPICAL SECTION (W/TURNING LANE)
NOT TO SCALE
STA. 145+00 - 147+50

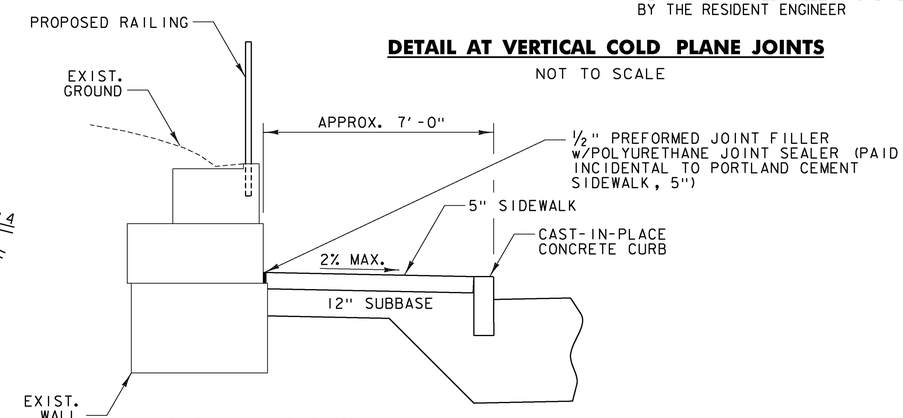

SIDEWALK SECTION AT RETAINING WALL
NOT TO SCALE

Stantec

PROJECT NAME: EAST MONTPELIER	
PROJECT NUMBER: BRF 037-1(7)	
FILE NAME: 03_Typicals.dgn	PLOT DATE: 2/17/2017
PROJECT LEADER: T. KNIGHT	DRAWN BY: E. ALLING
DESIGNED BY: K. RICHARDSON	CHECKED BY: G. GOYETTE
ROADWAY TYPICAL SECTIONS TYP 1	SHEET 3 OF 158