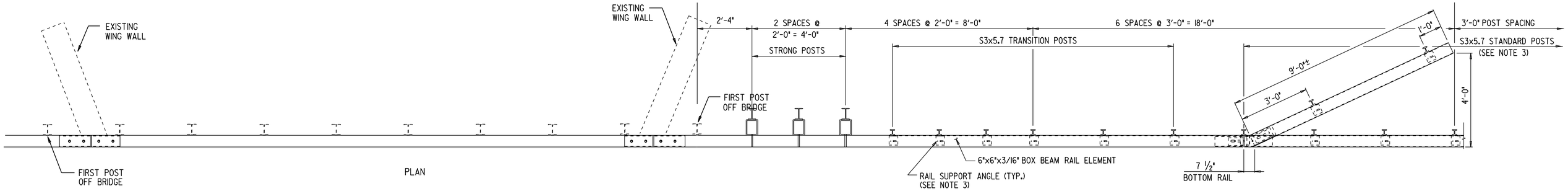


PLAN

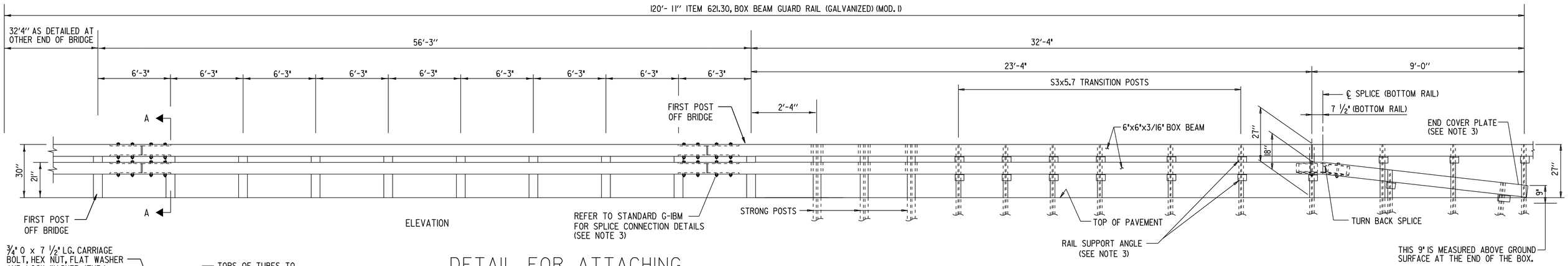


ELEVATION

# DETAIL FOR ATTACHING BOX BEAM GUARD RAIL TO EXISTING FASCIA MOUNTED POSTS BRIDGE 145

NOT TO SCALE

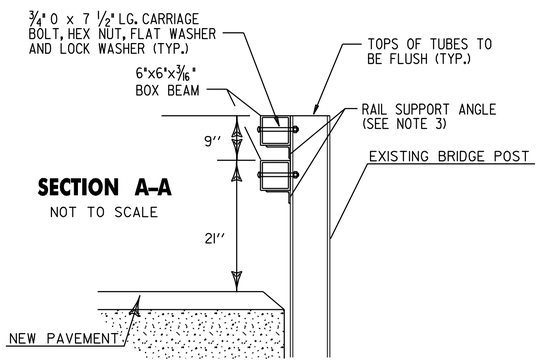


## SECTION A-A

NOT TO SCALE

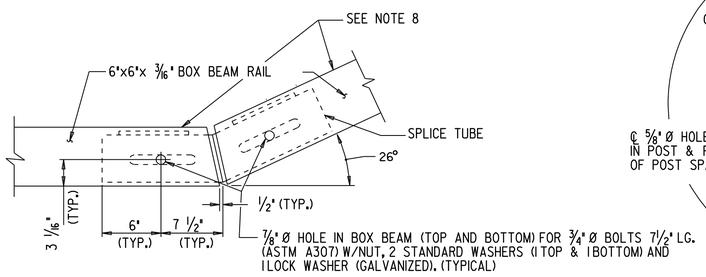


## SPLICE DETAIL AT TURN BACK IN LOWER TRANSITION GUARD RAIL

NOT TO SCALE

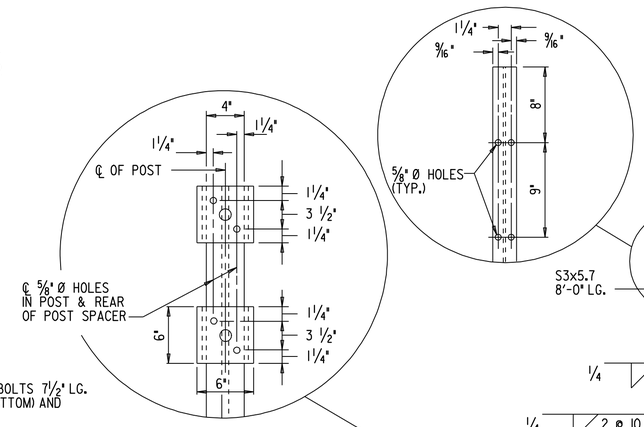


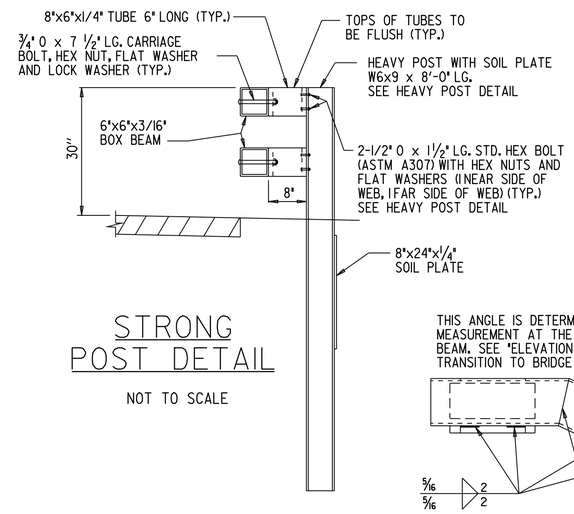


## STRONG POST DETAIL

NOT TO SCALE

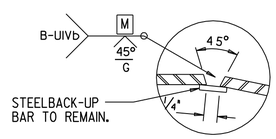


## WELD DETAIL FOR SPLICE TUBE

NOT TO SCALE

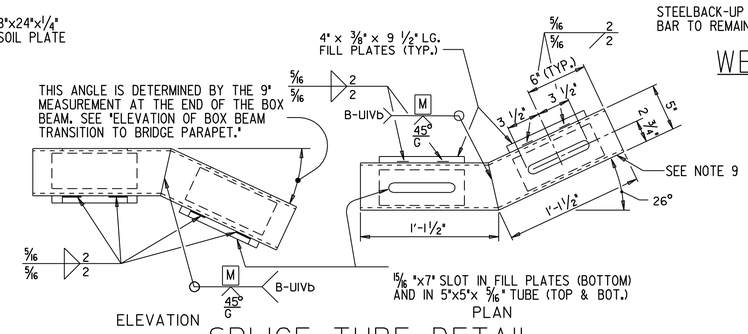


ELEVATION PLAN

## SPLICE TUBE DETAIL FOR TURN BACK

NOT TO SCALE

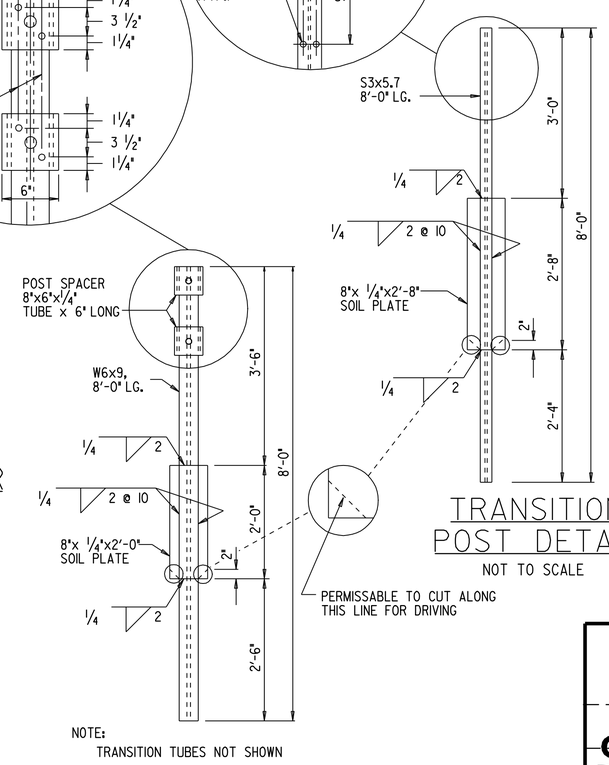


NOTE:
TRANSITION TUBES NOT SHOWN

## TRANSITION POST DETAIL

NOT TO SCALE

## HEAVY POST DETAIL

NOT TO SCALE

NOTES:

1. ALL BOX BEAM DETAIL DIMENSIONS ARE IN ENGLISH UNITS. THE FINAL QUANTITIES HAVE BEEN CONVERTED TO METRIC FOR PAYMENT.
2. ALL BOX BEAM COMPONENTS, INCLUDING POSTS AND HARDWARE, SHALL CONFORM TO THE CURRENT SPECIFICATION FOR BOX BEAM GUARD RAIL. REFER TO STANDARD G-1BM FOR DETAILS. ALL BOX BEAM COMPONENTS, INCLUDING POSTS AND HARDWARE, SHALL BE GALAVANIZED.
3. FOR DETAILS OF STANDARD POST, EXTRA LONG POST, RAIL ELEMENT, RAIL SUPPORT ANGLE, SPLICE CONNECTIONS, END COVER PLATE, TYPE II END ASSEMBLY AND DELINEATION DEVICE, SEE THE VAOT STANDARD SHEET G-1BM, "BOX BEAM GUARD RAIL."
4. IN LOCATIONS OF STANDARD BOX BEAM PLACEMENT (SUCH AS RAIL CONTINUING BEYOND THE END OF RUB RAIL), EXTRA LONG POSTS SHALL BE USED IF THE TOP OF EMBANKMENT IS LESS THAN ONE METER (3') BEHIND THE FACE OF RAIL. REFER TO STANDARD G-1BM FOR DETAILS OF EXTRA LONG POSTS.
5. THIS PLAN VIEW SHOWS TANGENT RAIL ELEMENTS, HOWEVER, THE RAIL ELEMENTS MAY BE SHOP FORMED TO AN INDICATED RADIUS (SEE SHEETS 38 AND 44 OF 49). THE RADII PROPOSED ON THOSE SHEETS SHALL BE VERIFIED BY THE CONTRACTOR PRIOR TO FABRICATION.
6. THE COST OF ALL EQUIPMENT, LABOR, AND MATERIALS NECESSARY TO COMPLETE THE WORK SHOWN FOR THESE DETAILS SHALL BE INCIDENTAL TO THE ITEM 621.30, BOX BEAM GUARD RAIL (MOD. 1, 2 OR 3). THE LENGTH OF THE LOWER BOX BEAM GUARD RAIL (RUB RAIL), INCLUDING ALL TURN BACK MATERIALS, SHALL NOT BE PAID SEPARATELY, BUT SHALL BE INCIDENTAL TO ITEM 621.30, BOX BEAM GUARD RAIL (MOD. 1, 2 OR 3).
7. BOX BEAM BRIDGE RAIL HEIGHT (30") SHALL TRANSITION TO THE NORMAL ROADWAY HEIGHT OF 27" AT THE POINT WHERE THE LOWER RUB RAIL TURNS BACK UNDER THE UPPER BOX BEAM RAIL.
8. PROTRUSIONS CAUSED BY WELDING ARE NOT PERMITTED ON THE INSIDE WALLS OF THE SPLICE AREA.
9. PROTRUSIONS CAUSED BY WELDING ARE NOT PERMITTED ON THE OUTSIDE WALLS OF THE SPLICE TUBE OR THE OUTSIDE SURFACES OF THE FILL PLATE.

**BRIDGE 145 BOX BEAM GUARD RAIL DETAIL SHEET**

| | | | |
|---|---|---|---|
| SURVEYED BY | N/A | DATE | N/A |
| DRAWN BY | C.A.K. | DATE | 11/00 |
| SQUAD LEADER | T.P.K. | | |
| DESIGN FILE NO. | /pgve/98b180/pb180.dgn | | |
| IPARM FILE | pb180boxl.i | DATE PLOTTED | 21-DEC-2006 15 |
| PROJ. NAME | ROCHESTER-GRANVILLE | | |
| PROJ. NO. | AC STP 2124(1)S | | |
| SHEET 46A OF 49 | | SHEETS | |