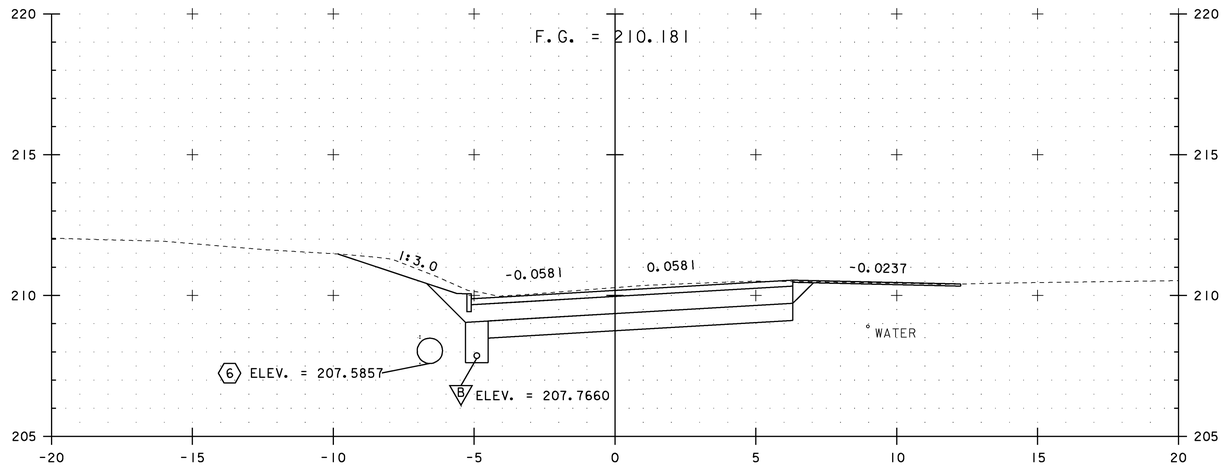

4+885.00
END PROJECT
BEGIN APPROACH

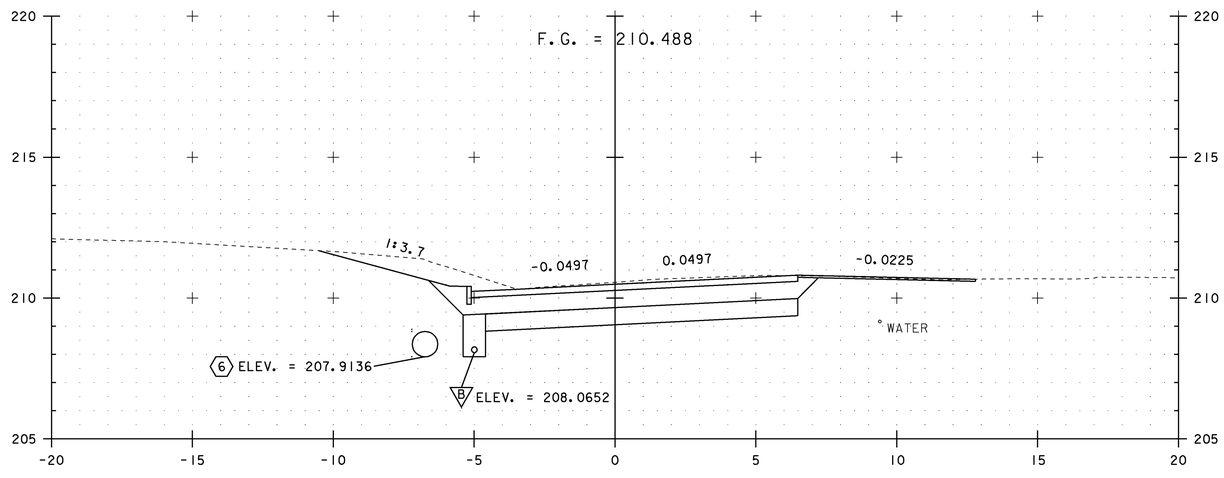

4+880.00

0 2 4 6 8 10
SCALE 1:100

NOTES:

1. ALL BURIED UTILITIES ARE EXISTING, THE LOCATIONS ARE APPROXIMATE AND ARE TO REMAIN UNDISTURBED
2. DRAINAGE FEATURES DISPLAYED ON CROSS SECTIONS ARE PROJECTED. SEE DRAINAGE DETAIL SHEETS, LAYOUTS AND PROFILES FOR TRUE LOCATIONS

STA. 4+880 TO STA. 4+885

PROJECT NAME: EAST MONTPELIER	
PROJECT NUMBER: STPG 028 - 3(35)S	
FILE NAME: t98b028xsl.dgn	PLOT DATE: 22-MAR-2010
PROJECT LEADER: J. SCHULTZ	DRAWN BY: D. LYMAN
DESIGNED BY: J. GRUCHACZ	CHECKED BY: J. DEVLIN
US ROUTE 2 CROSS SECTION SHEET 14	SHEET 112 OF 142