NOT Metric

VT STATE PLANE GRID

NEW UNDERDRAIN

U8 — 2+700.287 RT ~ 2+774.157 RT
NEW 150 mm x 74.039 m UNDERDRAIN
W/ CARRIER PIPE & F.B. @ 2+774.157 RT
INV. IN = 61.546; INV. OUT = 58.697

U9 — 2+775.287 RT ~ 2+830.383 RT
NEW 150 mm x 55.555 m UNDERDRAIN
W/ CARRIER PIPE & FLUSHING ACCESS
INV. IN = 63.302; INV. OUT = 62.400

U10 — 2+705.793 LT ~ 2+769.676 LT
NEW 150 mm x 64.705 m UNDERDRAIN
W/ CARRIER PIPE & FLUSHING ACCESS
INV. IN = 61.685; INV. OUT = 58.312

U13 — 2+770.285 LT ~ 2+818.301 LT
NEW 150 mm x 47.914 m UNDERDRAIN
W/ CARRIER PIPE & F.B. @ 2+818.301 LT
INV. IN = 62.274; INV. OUT = 61.985

U14 — 2+818.301 LT ~ 2+879.654 LT
NEW 150 mm x 61.520 m UNDERDRAIN
INV. IN = 62.983; INV. OUT = 62.825

NEW DRAINAGE

I1 — 2+775.511 RT ~ 2+830.228 RT
NEW 450 mm x 54.910 m OPTION AA PIPE
INV. IN = 62.627; INV. OUT = 62.175

I2 — 2+700.512 RT ~ 2+774.489 RT
NEW 450 mm x 73.979 m OPTION AA PIPE
INV. IN = 62.100; INV. OUT = 58.472

I5 — 2+705.477 LT ~ 2+769.489 LT
NEW 450 mm x 64.039 m OPTION AA PIPE
INV. IN = 61.385; INV. OUT = 57.712

NOTES

1) SEE CONSTRUCTION FOR ADDITIONAL PROPOSED FACILITIES.
2) SEE UTILITY PLANS FOR LOCATIONS OF PROPOSED UTILITY RELOCATIONS.

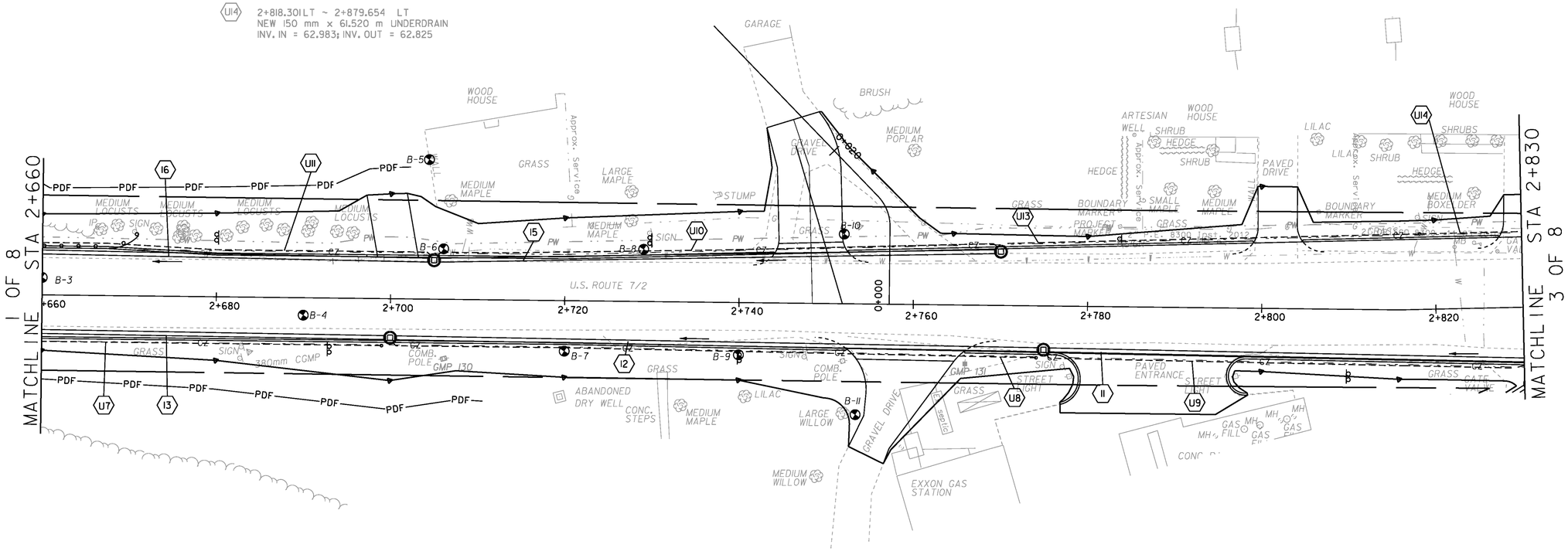

0 10 20
SCALE IN METERS

PROJECT NAME: COLCHESTER	
PROJECT NUMBER: STP 5600(9)S	
FILE NAME: r97d206DRN2.dgn	PLOT DATE: 21-FEB-2013
PROJECT LEADER: J. SCHULTZ	DRAWN BY: T. KELLEY
DESIGNED BY: D. BRYANT	CHECKED BY: D. BURHANS
DRAINAGE PLAN SHEET 2 OF 8	SHEET 34 OF 74