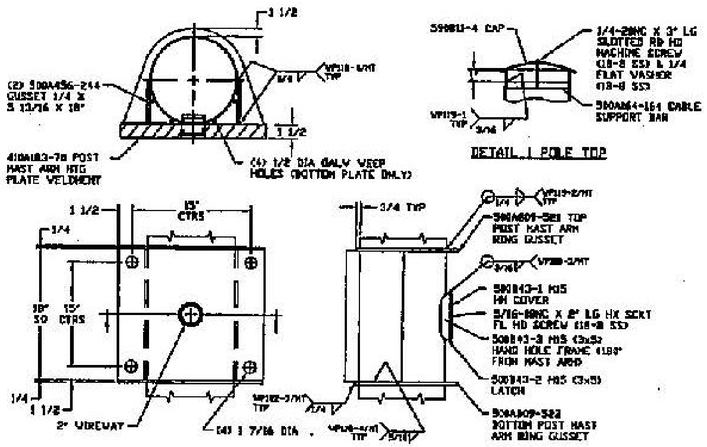

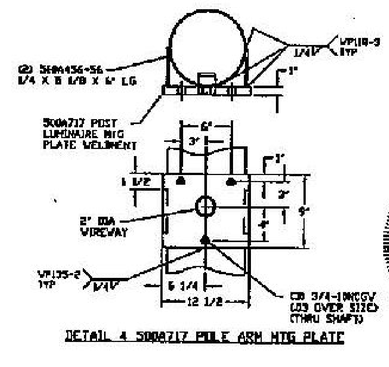

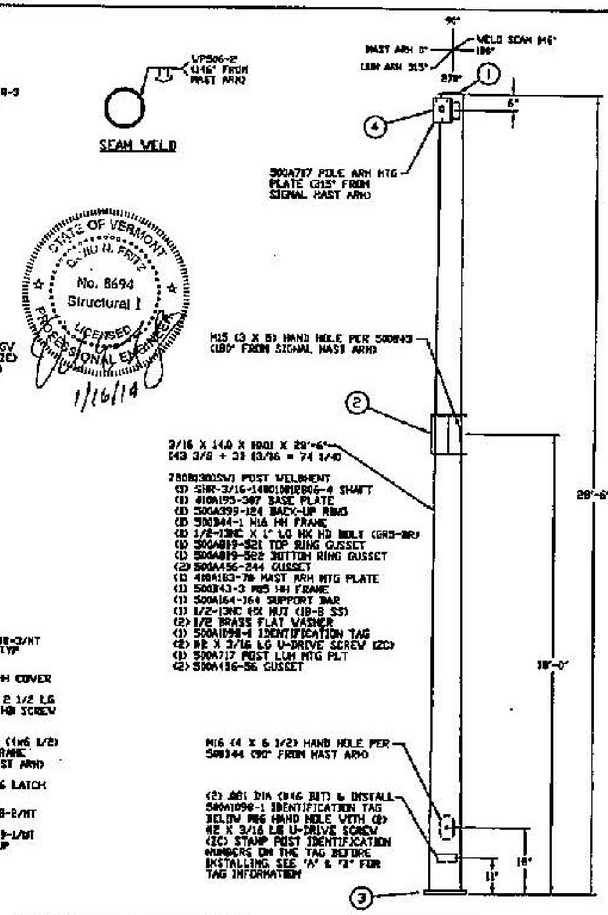

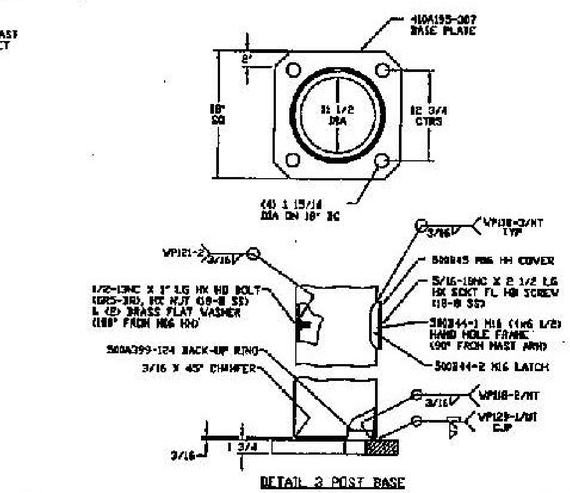

NOTE:

1. MATERIAL-HIGH STRENGTH LOW ALLOY STEEL 55,000 PSI MIN YIELD PER ASTM A572. POST AND MAST ARM MOUNTING BASE MATERIAL PER ASTM A36.
2. FINISH-HOT DIP GALVANIZED PER ASTM A123 WITH TOP COAT PAINTED MILLERBERND FLAT BLACK MILLERBERND #PI-1-17-FTU-093-FR
3. POST TO BE ROUND TAPERED TUBE FABRICATED WITH ONE SUBMERGED ARC LONGITUDINAL SEAM WELD WITH 100% PENETRATION 6" FORM BASE PLATE AND 60% FOR REMAINDER. GAS METAL ARC WELDING PROCESS TO BE USED FOR REMAINDER OF WELDED FABRICATION WITH 100% PENETRATION WELD FOR BASE PLATE TO SHAFT CIRCUMFERENTIAL WELD
4. WELD TESTING-100% PENETRATION WELDS ULTRASONIC TESTED (UT) USING THE CYCLICALLY LOADED ACCEPTANCE/REJECTION CRITERIA TABLE 6.3 OF AWS D1.1 SPECIFICATION. 100% OF THE POST/MAST ARMCONNECTION WELDS MAGNETIC PARTICLE TESTED (MT) AND A RANDOM 30% OF REMAINING FILLET WELDS & PARTICLE PENETRATION LONGITUDINAL SEAM WELDS MAGNETIC PARTICLE TESTED (MT)
5. HX HD BOLTS & NUTS (UNLESS SPECIFIED) ASTM A325 GALV A153 FOR SIZES 1/4 TO 1 1/2 DIA & ASTM A354BC GV A153 FOR SIZES OVER 1 1/2 DIA.
6. THE POST AND THE FOLLOWING ITEMS WILL BE SHIPPED UNASSEMBLED:
   - (1) 500B49 M16 HH COVER
   - (1) 500B44-2 M16 HH LATCH
   - (1) 5/16-18NC X 2 1/2 LG HX SCKT FL HD SCREW (18-8 SS)
   - (1) 590B11-4 STEEL CAP
   - (1) 1/4-20NC X 3" LG SLOTTD RD HD MACHINE SCREW (18-8 SS)
   - (1) 1/4 FLAT WASHER (18-8 SS)
   - (1) 500B43-1 M15 HH COVER
   - (1) 500B43-2 M15 HH LATCH
   - (1) 5/16-18NC X 2" LG HX SCKT FL HD SCREW (18-8 SS)

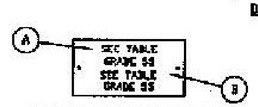

IDENTIFICATION TAG EXAMPLE

PART NO	QTY	DESCRIPTION	"A" POST TAG INFORMATION	"B" MAST ARM TAG INFORMATION
780B1300	1	SIGNAL POST	3/16X14X10X286 GRADE 55	7/16 X 11.0 X 5.0 X 300 GRADE 55

PO#3250-2139 / VT DOT: STP.0244(17) RICHMOND / US ROUTE 2, VT ROUTE 117

US ROUTE 2,
OFF-RAMP (RAMP D)
MILLERBERND #51660

REV 10-01-13 WAS 10-08-03 15:14:10- PJF

DWN: DOUG F.	RE4HA-180/286-J3I5-VT ROUND SIGNAL POST 3/16 X 14.0 X 28'-6" POST LUMINAIRE ARM AT 315 DEG
DATE: 10-30-13	
CHK: REBEKAH	MILLERBERND 622 6TH ST. SO. WINSTED, MN 55395 — 780B1300
SCALE: NTS	

APPROVED
By Derek Lyman at 8:55 am, Feb 11, 2014