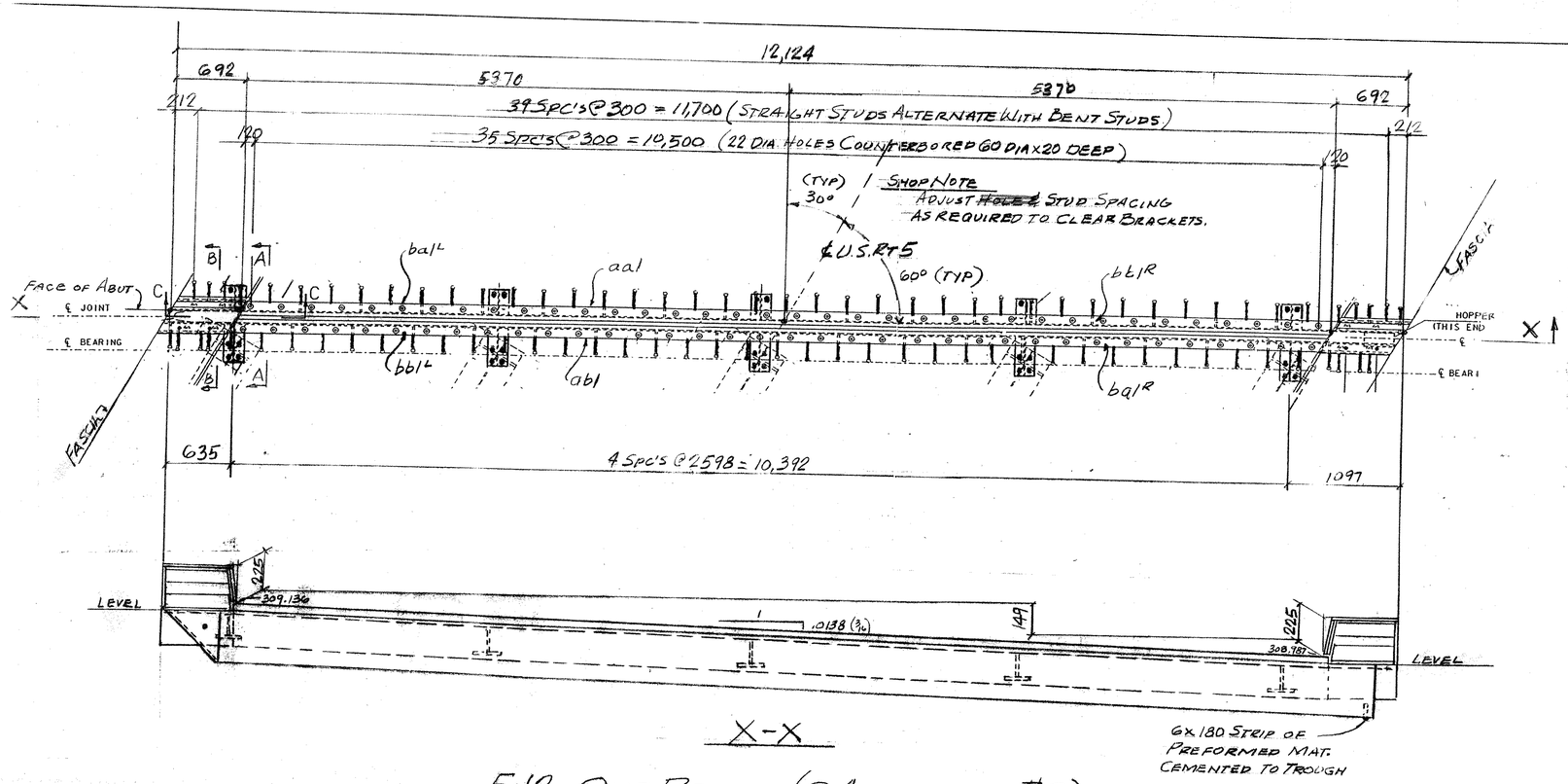

EJ2 - One Req'd - (@ Abutment #2)

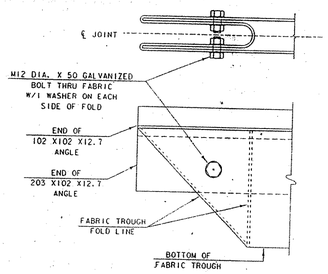

Folded Trough End Details

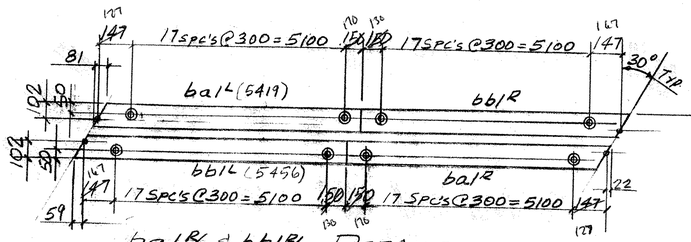

Work This Dwg. W/ Dwg. J1A

ba1 1/2 & bb1 1/2 Details

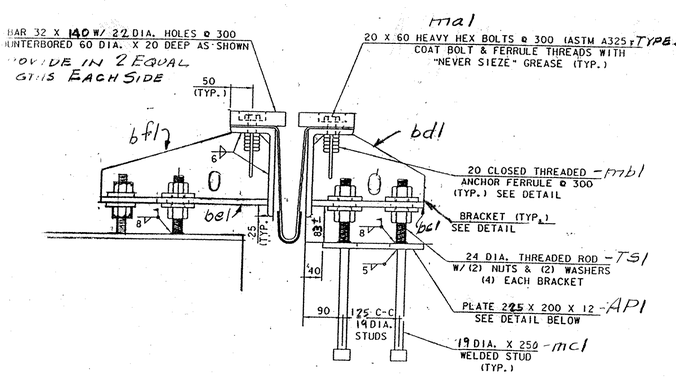

Section @ Beams

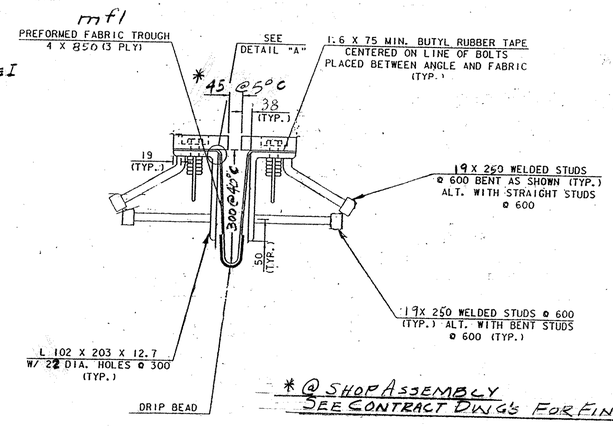

* @ Shop Assembly
See Contract Dwg's For Final Settings.

Typ. Section Between Beams

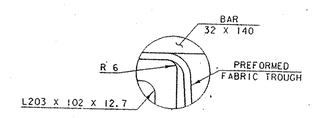

Detail "A"

Anchor Ferrule - mb1

RECEIVED
CK'D BY WJS OK'D BY RSY
OCT 14 2002
RESUBMIT ____ APPROVED As Noted
BY WJS DATE 10/11/02

PLANS DRAWN USING
METRIC
DIMENSIONS

ABM INFO PAGE	LINE	NO.		DESCRIPTION	mm	ASSEM. MARK	SHIPPING MARK	REMARKS	WEIGHT
		1		Exp. Jnt Ass'y	12,124		EJ2		—
			1	L 203 x 102 x 12.7	12,124	aa1			
			1	Do	12,124	ab1			
			2	Bar 140 x 32	5419	ba1½			
			2	Do	5456	bb1½			
			5	PL 12 x 200	250	bc1			
			5	PL 12 x 153	250	bd1			
			5	PL 12 x 200	382	be1			
			5	PL 12 x 153	382	bf1			
			72	M20 H.S. Bolts	57	ma1			
			72	M20 Anc. Ferrules Closed Threaded		mb1			
			80	M19 Anc. Studs	250	mc1			
			1	Preformed Fabr. 4 mm x 850	12,500	mf1		3 Ply Per Assy.	
			2	Butyl Rubber Tape 1.6 x 75	12,500			Spec. M-119 Type II	
			2	M12 Bolt (Galv.)	50			M12 2 Wash	
		40		M24 Threaded Rods	178		TS1		
			80	M24 Hex Nuts					
			40	Bar 75 x 10	75	W1		Washer	
		5		PL 12 x 200	225		AP1	Not Galv.	
			20	M19 Anc. Studs	250	mc1			
			7	L 102 x 102 x 9.5	375±	sa1			
			14	M20 H.S. Bolts	76			W/1 Wash	
	Curbs								
			2	PL 12 x 273	824	cp1			
			2	PL 12 x 210	318	cp1a			
			2	PL 12 x 270	318	cp1b			
			2	PL 12 x 50	697	cp2			
			2	Do	210	cp2a			
			2	Do	270	cp2b			
			4	PL 12 x 240	667±	cp3		Fit	
			2	PL 12 x 118	210	cp3a			
			2	PL 12 x 118	270	cp3b			
			2	L 102 x 102 x 12.7	700±	aa1		Fit	
			2	Do	700±	aa2		Fit	
			4	Do	726±	aa3		Fit	
			16	M20 H.S. Bolts	57	ma1			
			16	M20 Anc. Ferrules Closed Threaded		mb1			
			8	M19 Anc. Studs	250	mc1			
			4	M20 Cap Screw Flat Head	50	md1			
				Pay Item 516.10					

JOB NO. 164 DRG. NO. J1

OUT FOR APPROVAL	9-26-02									
OUT FOR APPROVAL Final	10-7-02									
ISSUED TO SHOP										
FIELD & OFFICE										
REV.	REMARKS	DATE	DWN	CHK	APP	Q.A.	NO.	DIA.	LGT	TYPE	WASHER

PROJECT NO. STP 0113 (58) S STATE PROJECT NO.

MATERIAL: AASHTO M270-Gr 250 | ELECTRODES: Per Proc. | HOLES: As Noted | SHOP BOLTS: M20 (M164)

SURFACE PREP. & PAINT:

Galv. After Fab. (ASTM A-123)

DESCRIPTION: Exp. Joint - Abut. #2

JOB: U.S. Route 5 Bridge No. 161 Barton, Vt.

CUSTOMER: Winterset

	DRAWN BY	DATE
	UPF	7-02
	CHKD BY	
	EJ	
	APPROV BY	
	Q.A.	

CASCO BAY STEEL STRUCTURES, INC.
75 SPRING HILL ROAD SACO, MAINE 04072
PHONE (207) 282-7360 FAX. (207) 282-1179

JOB NO. 164 DRG. NO. J1 REV. 1