GENERAL NOTES

CONSTRUCTION SPECIFICATIONS

1). ALL MATERIAL AND WORKMANSHIP TO BE IN ACCORDANCE WITH THE STATE OF VERMONT AGENCY OF TRANSPORTATION STANDARD SPECIFICATIONS FOR CONSTRUCTION DATED 1995 WITH LATEST REVISIONS AND THE SPECIAL PROVISIONS.

DESIGN SPECIFICATIONS

1). AMERICAN ASSOCIATION OF STATE HIGHWAY AND TRANSPORTATION OFFICIALS (A.A.S.H.T.O) STANDARD SPECIFICATIONS FOR HIGHWAY BRIDGES, 1996 EDITION WITH LATEST REVISIONS.

MATERIAL SPECIFICATIONS

1). UNLESS NOTED, ALL STEEL TO BE AASHTO M270 GRADE 345W (~~ASTM A709-345W~~).

2). HIGH STRENGTH BOLTS: AASHTO M164 (ASTM A325) ~~7/8"~~ 22 mm (7/8") DIA.
TYPE 3 BOLTS SHALL BE USED FOR UNPAINTED CONNECTIONS.
TYPE 1 (GALV.) BOLTS SHALL BE USED FOR PAINTED CONNECTIONS.

3). GIRDER WEB & BOTTOM FLANGES SHALL BE CHARPY V NOTCH TESTED IN ACCORDANCE WITH THE REQUIREMENTS OF VERMONT STANDARD SPECIFICATIONS. DRAWINGS SHALL CALL OUT "H2-3" FOR EACH APPLICABLE ITEM IN THE BILLS OF MATERIAL.

FABRICATION

1). ALL HOLES SHALL BE PUNCHED OR DRILLED FULL SIZE (UN).

2). STUDS ARE FURNISHED AND FIELD APPLIED BY OTHERS.

WELDING

1). THE CONFIGURATION OF THE WELD JOINTS AND ALL WELDING PROCEDURES SHALL BE IN ACCORDANCE WITH AASHTO/AWS D1.5-02 BRIDGE WELDING CODE AND IN ADDITION TO SPECIFICATIONS SHOWN ABOVE. ALL WELDING WILL BE DETAILED TO PRE-QUALIFIED JOINTS, UNLESS PROHIBITED BY THE DESIGNER.

2). WELDING OF MAIN LOAD CARRYING MEMBERS AND ATTACHMENTS SHALL BE PERFORMED USING THE AUTOMATIC SUBMERGED ARC & SHIELDED METAL ARC PROCESSES. ALL WELDS ARE CONTINUOUS U.N.

3). NON DESTRUCTIVE TESTING OF WELDS SHALL BE IN ACCORDANCE WITH THE REFERENCED SPECIFICATION.

CLEANING:

1). ALL STEEL SHALL BE BLAST CLEANED AS PER SSPC SP-10 PER SPEC. 506.14(a)

2). 2mm RADIUS ON ALL EDGES OF PAINTED SURFACES.

PAINTING

1). ALL STEEL COMPONENTS WITHIN 1500mm OF THE ABUTMENT 2 END OF GIRDERS SHALL BE COATED WITH THE PROTECTIVE SYSTEM ACCORDING TO SECTION 513 OF THE SPECIFICATION.(SEE SKETCH "P1") THE PAINT COLOR SHALL BE BROWN. PAINT SYSTEM MUST BE SYSTEM LISTED ON THE QUALIFIED PRODUCT LIST SECTION 513.02 BROWN COLOR CHIP #20059.
PROTECTIVE GREASE SHALL BE APPLIED IN THE FIELD BY OTHERS.

FIELD CONNECTIONS

1). ALL FIELD CONNECTIONS SHALL BE MADE WITH 7/8" (22mm) [22 mm (7/8")] DIAMETER HIGH STRENGTH A-325 BOLTS, INSTALLED PER SECTION 506.19(c).

2). BOLTS SHALL HAVE HEAVY HEX NUT, HEX HEAD, & ONE FLAT WASHER EACH (WASHER TO BE PLACED UNDER TURNED ELEMENT).

3). PIECE MARKS WILL BE LOCATED AS SHOWN ON ERECTION DRAWINGS.

4) THE RECOMMENDED ERECTION SEQUENCE IS TO INSTALL MIDSPAN CROSS FRAME FIRST IN EACH BAY. THE remaining crossframes in Each Bay should be installed working towards each end. Some distortion and leaning of the girders is necessary and expected at the ends.

5) At OVERSIZED HOLE LOCATIONS A Hardened washer shall be placed under both the head and nut.

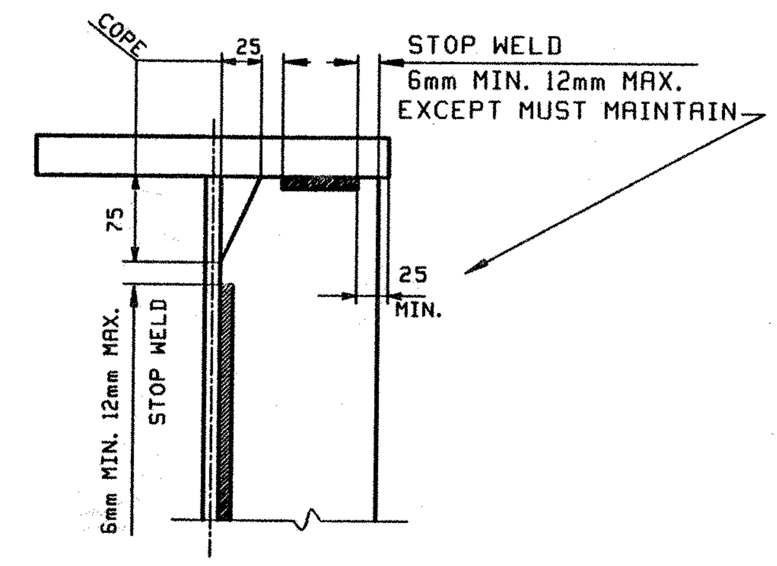

DETAIL "WS1"

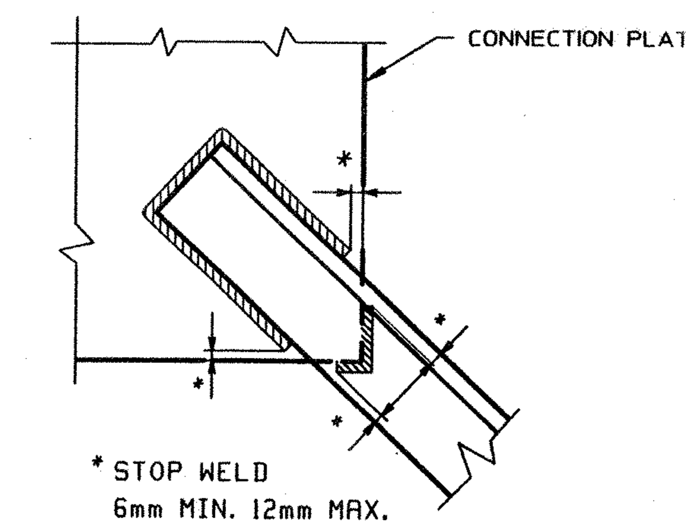

TYP. WELD TERMINATION

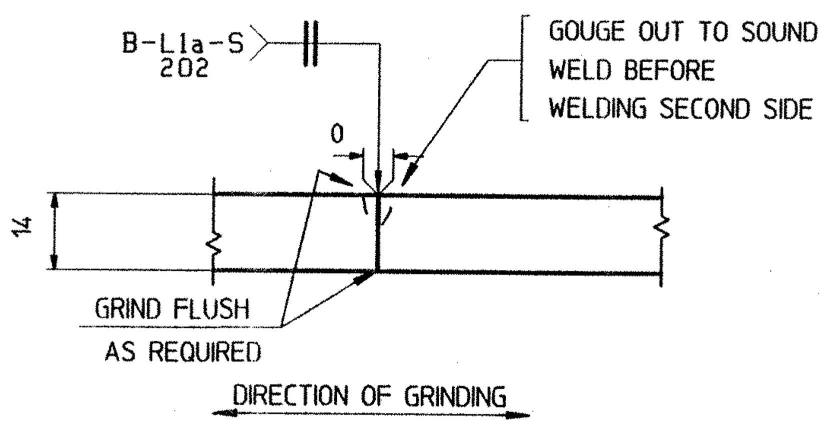

WEB PLATE SPLICE DETAIL "WA"

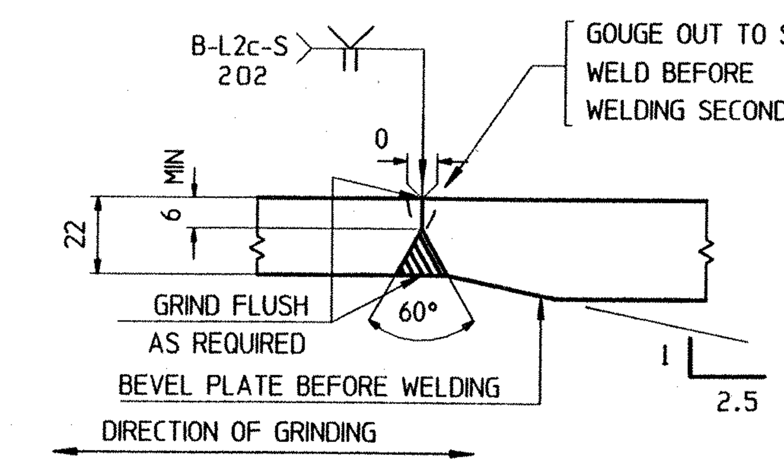

FLANGE PLATE SPLICE DETAIL "FA"

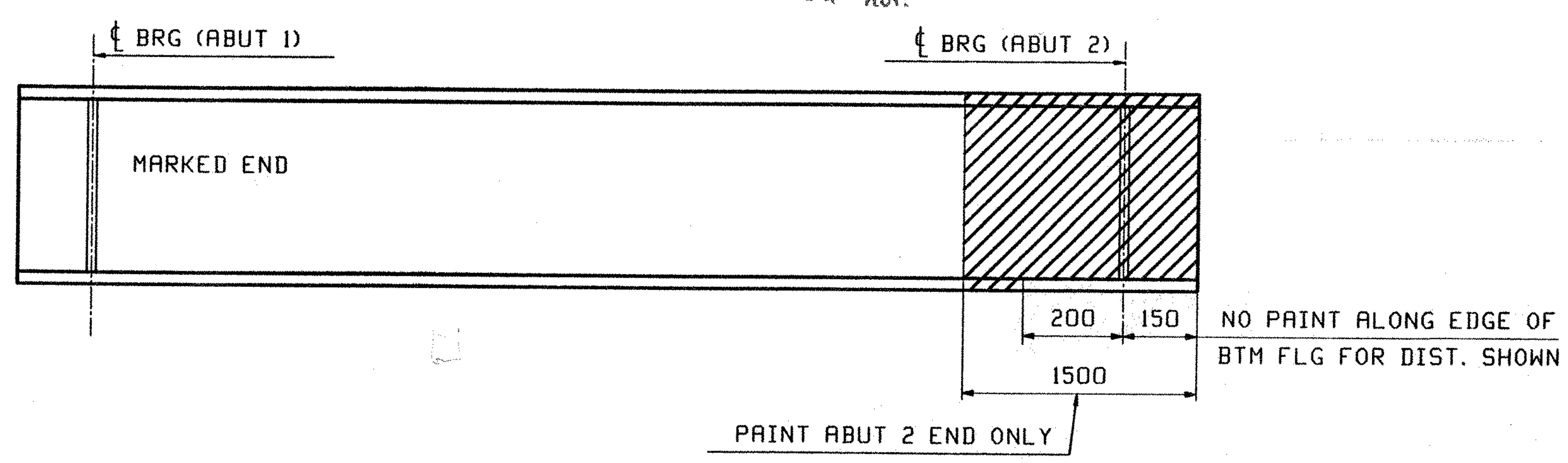

PAINT SKETCH "P1"

NOTE TO ENGINEER:
THESE NOTES ARE NOT INTENDED TO BE ALL INCLUSIVE AND COMPLIANCE WITH RELEVANT SPECIFICATIONS REMAIN UNCHANGED.

RECEIVED
CK'D BY WBS OK'D BY RSY
SEP 04 2002
RESUBMIT ____ APPROVED As Noted
BY CPW DATE 9/17/02

REV.	REMARKS	DATE	DWN	CHK	APP	Q.A.	NO.	DIA.	LGT	TYPE	WASHER
OUT FOR APPROVAL		8-30-02									
OUT FOR APPROVAL											
ISSUED TO SHOP											
FIELD & OFFICE											

MATERIAL:	ELECTRODES:	HOLES:	SHOP BOLTS:
M270M-345W		24 mm (15/16")ø	

SURFACE PREP. & PAINT:
-STEEL WITHIN 1500 OF ABUT. 2 END OF GIRDERS SHALL BE PAINTED (SEE GN1)
-ALL OTHER STEEL SHALL BE BLAST CLEANED AND LEFT UNPAINTED.

DESCRIPTION: GENERAL NOTES	DRAWN BY	DATE
JOB: US Route 5 over Northern Vermont RR	WL	08/02
BRIDGE NO. 161	CHKD BY	
BARTON, VERMONT (ORLEANS COUNTY)	JAK	08/05
	APPROV BY	
TENSOR 2256 CONTRACTOR: WINTERSET	SUPERVISOR	W. J. GATTI
PROJ NO. AC STP 0113 (58) S	Q.A.	
CUSTOMER: VERMONT AGENCY OF TRANSPORTATION		
CASCO BAY STEEL STRUCTURES, INC.	JOB NO.	DRG. NO.
75 SPRING HILL ROAD SACO, MAINE 04072	163	GN1
PHONE (207) 282-7360 FAX. (207) 282-1179		REV. △