Metric

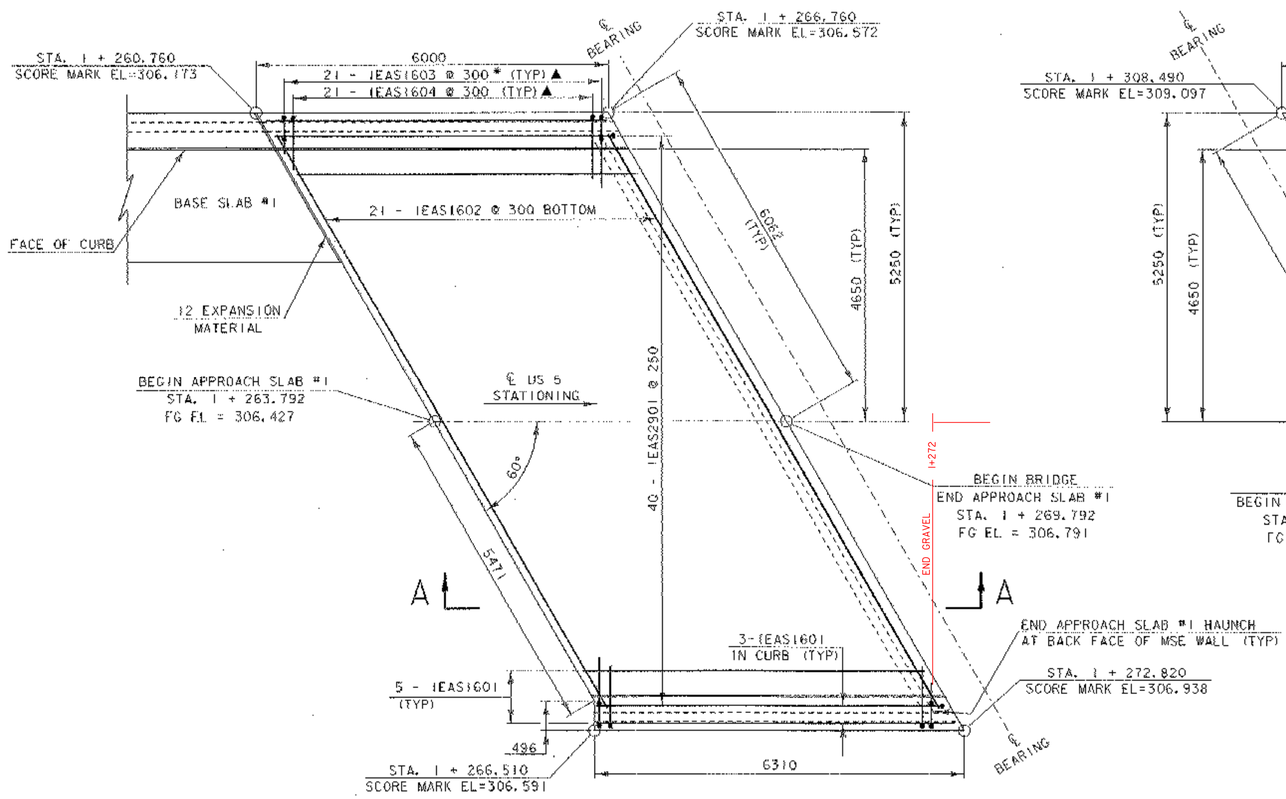

PLAN VIEW
APPROACH SLAB NO. 1

SCALE 1 : 50

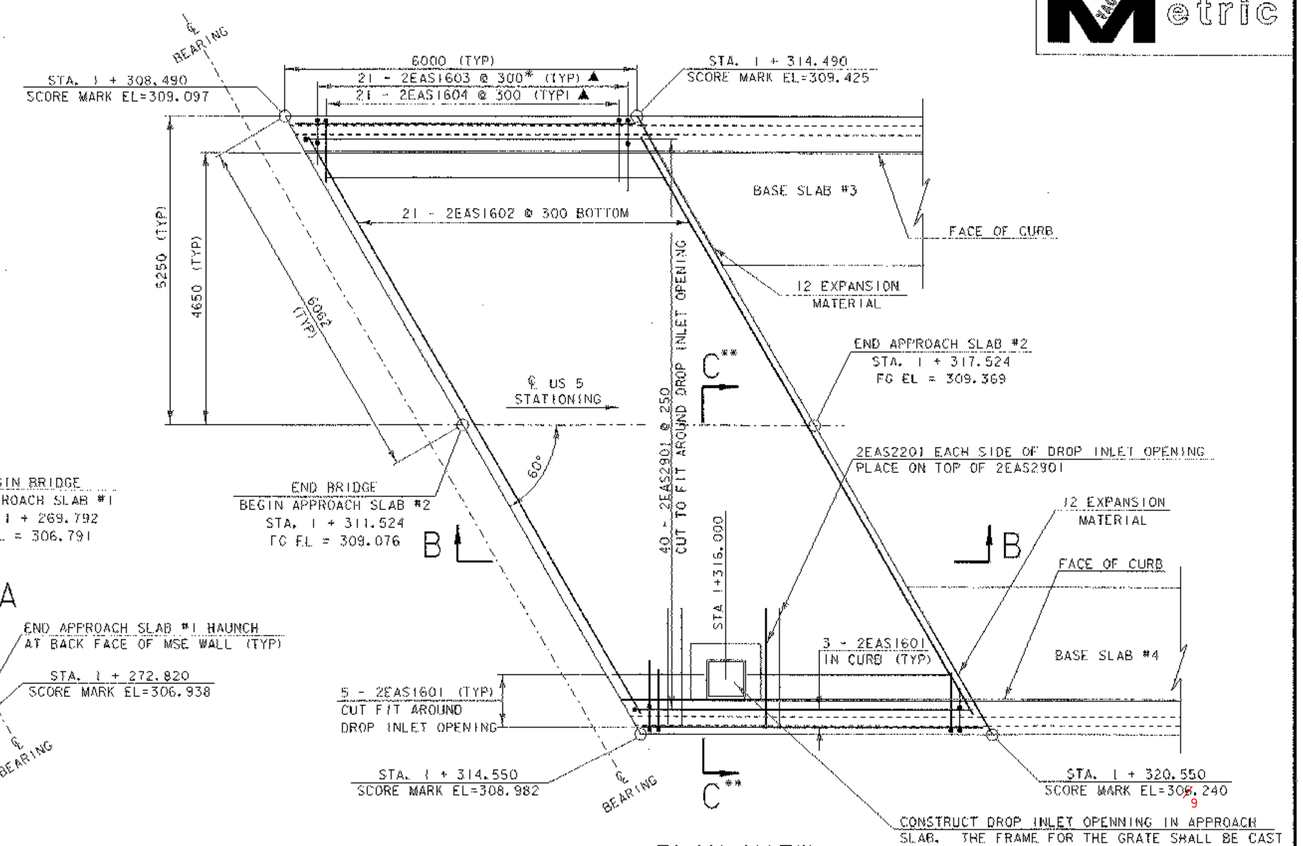

PLAN VIEW
APPROACH SLAB NO. 2

SCALE 1 : 50

* MODIFY SPACING @ POSTS (+ 9 ADDITIONAL FOR POST ANCHORAGE) (SEE STANDARD BR1-97M)

** SEE SHEET 61 OF 120 FOR SECTION C-C

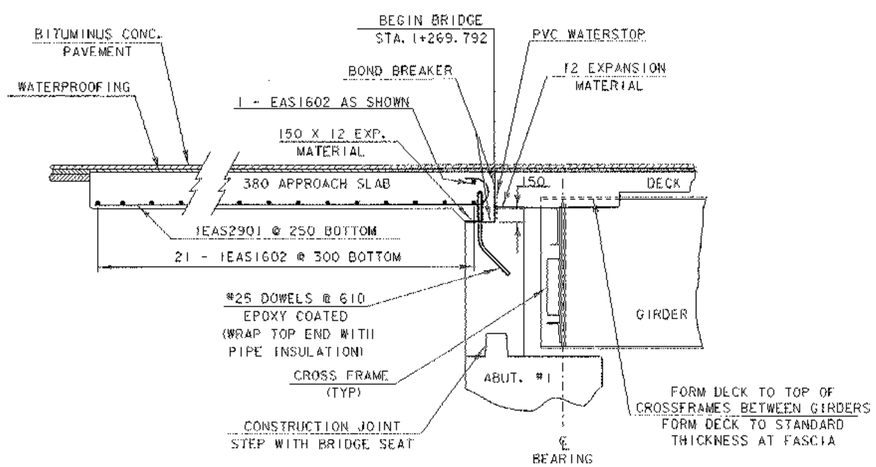

SECTION A - A

SCALE 1 : 30

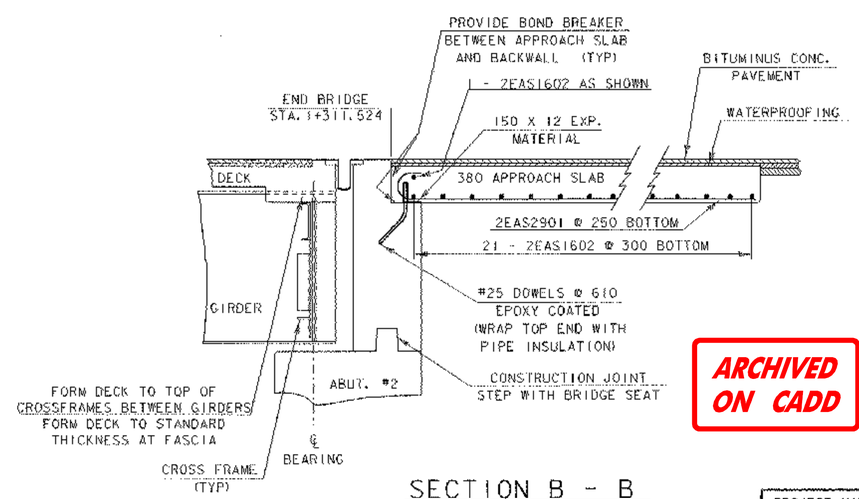

SECTION B - B

SCALE 1 : 30

NOTES:

NF = NEAR FACE
FF = FAR FACE
EF = EACH FACE
▲ = CUT TO FIT IN FIELD

75 CLR. UNLESS OTHERWISE SPECIFIED ON THE PLANS.

ALL LAPS SHALL BE 660 UNLESS NOTED OTHERWISE.

BASE SLAB #2 IS NOT REQUIRED FOR THIS PROJECT.

ALL REINFORCING STEEL SHALL BE EPOXY COATED.

0 1 2 3 4 5
SCALE = 1:50

0 1 2 3
SCALE = 1:30

ARCHIVED ON CADD

PROJECT NAME:	BARTON
PROJECT NUMBER:	STP 0113 (58) S

FILE NAME: 96c116/Structures/sc116sup.dgn
IPARM NAME: 96c116/Structures/sc116app2/eb.i
PROJECT LEADER: C. P. WILLIAMS
DESIGNED BY: W. B. SYMONDS
APPROACH SLAB DETAILS

PLOT DATE: 03-JAN-2002
DRAWN BY: T. C. ANDERSON
CHECKED BY: W. B. SYMONDS
SHEET 62 OF 120