Metric

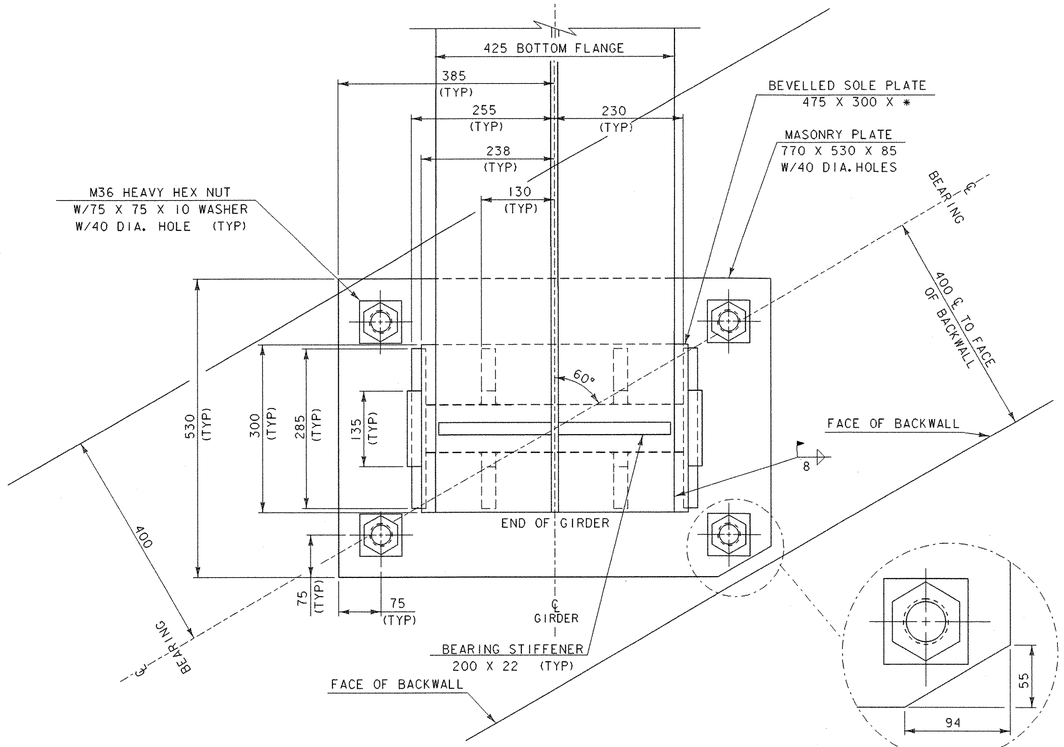

PLAN VIEW

SCALE 1 : 5

SOLE PLATE CLIP DETAIL
NOT TO SCALE

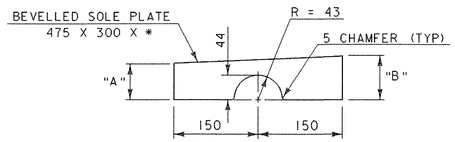

SOLE PLATE DETAIL*

SCALE 1 : 5

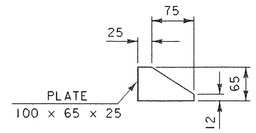

INNER COLUMN BRACE DETAIL

(4 REQUIRED)
SCALE 1 : 5

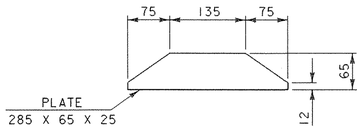

OUTER COLUMN BRACE DETAIL

(2 REQUIRED)
SCALE 1 : 5

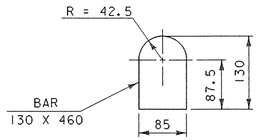

BEARING COLUMN DETAIL

SCALE 1 : 5

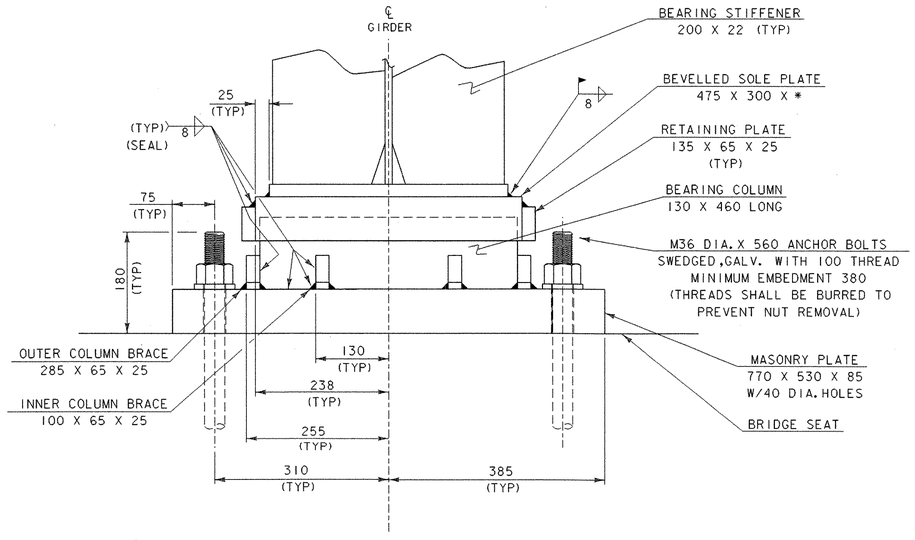

FRONT ELEVATION

SCALE 1 : 5

*BEVEL PLATE THICKNESS		
	"A"	"B"
ABUTMENT #1	67	85

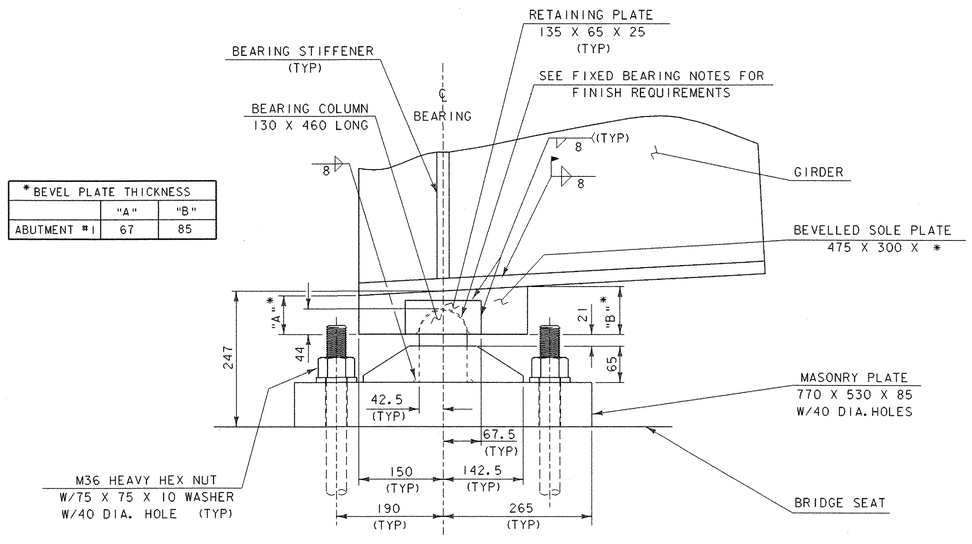

SIDE ELEVATION

SCALE 1 : 5

0 0.25 0.5

SCALE = 1:5

PROJECT NAME: BARTON
PROJECT NUMBER: STP 0113 (58) S

FILE NAME: 96c116/STRUCTURES/sc116bearing.dgn
IPARM NAME: 96c116/STRUCTURES/sc116fixedbrg.i
PROJECT LEADER: C.P. WILLIAMS
DESIGNED BY: W.B. SYMONDS
ABUTMENT #1 - FIXED BEARINGS

PLOT DATE: 03-JAN-2002
DRAWN BY: T.G. ANDERSON
CHECKED BY: W.B. SYMONDS
SHEET 55 OF 120