Metric

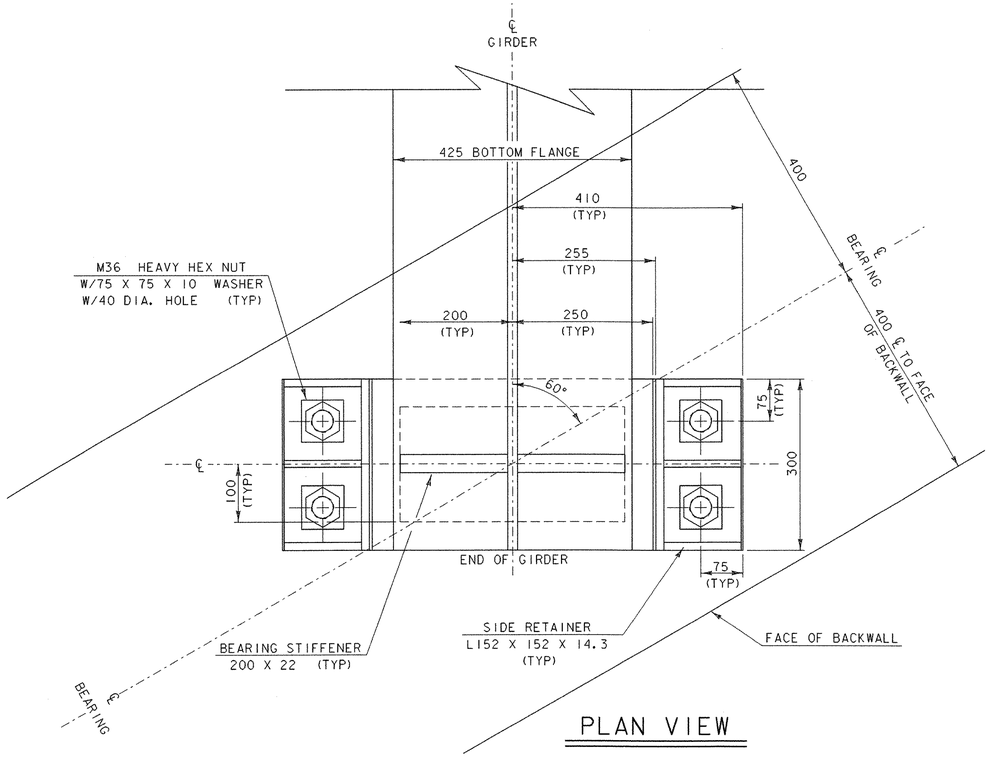

PLAN VIEW

SCALE 1 : 5

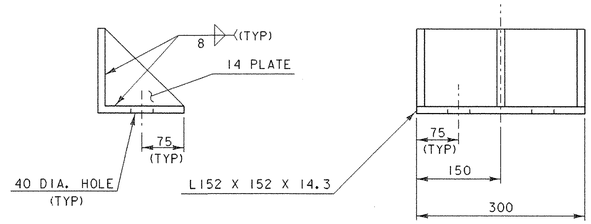

SIDE RETAINER

SCALE 1 : 5

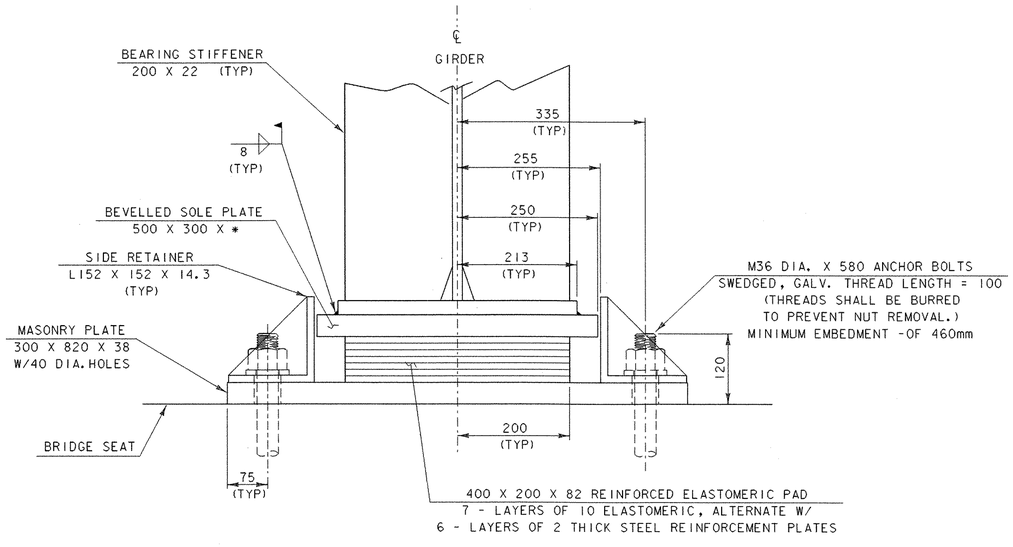

END ELEVATION

SCALE 1 : 5

*BEVEL PLATE THICKNESS		
	"A"	"B"
ABUTMENT #2	53	38

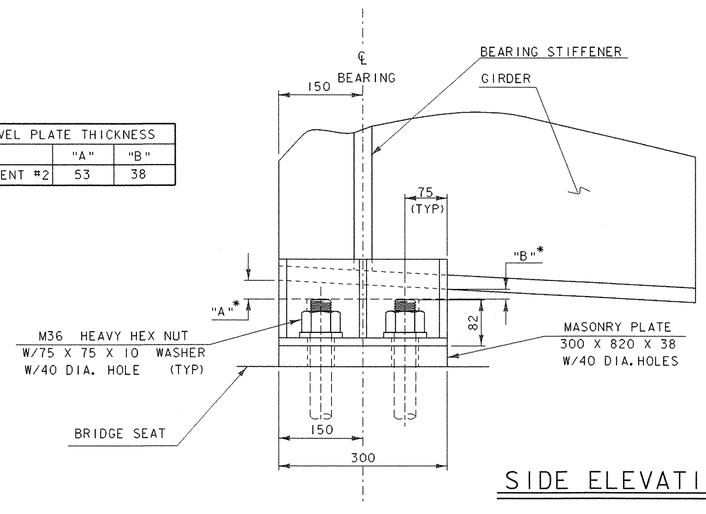

SIDE ELEVATION

SCALE 1 : 5

0 0.25 0.5

SCALE = 1:5

PROJECT NAME: BARTON
PROJECT NUMBER: STP 0113 (58) S

FILE NAME: 96c116/STRUCTURES/sc116bearing.dgn
IPARM NAME: 96c116/STRUCTURES/sc116expbrg.i
PROJECT LEADER: C.P. WILLIAMS
DESIGNED BY: W.B. SYMONDS
ABUTMENT #2 - EXPANSION BEARINGS

PLOT DATE: 03-JAN-2002
DRAWN BY: T.G. ANDERSON
CHECKED BY: W.B. SYMONDS
SHEET 54 OF 120