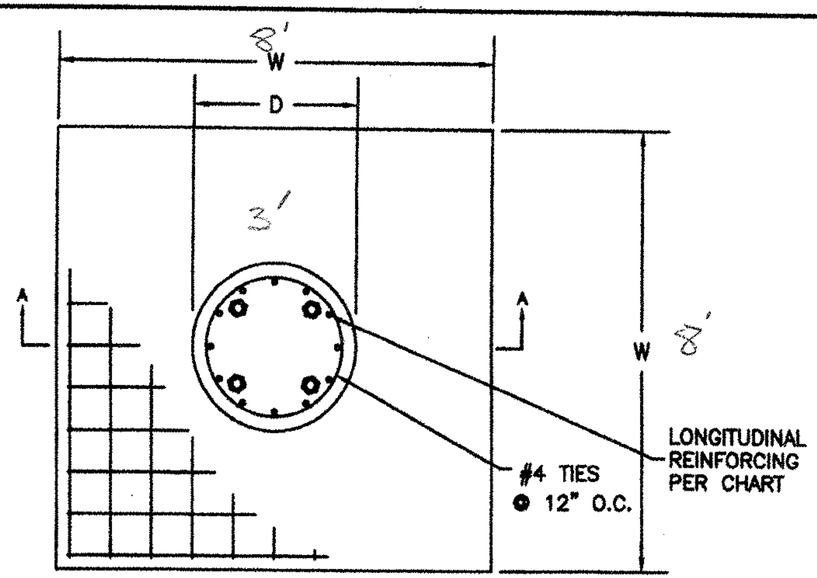

PLAN VIEW

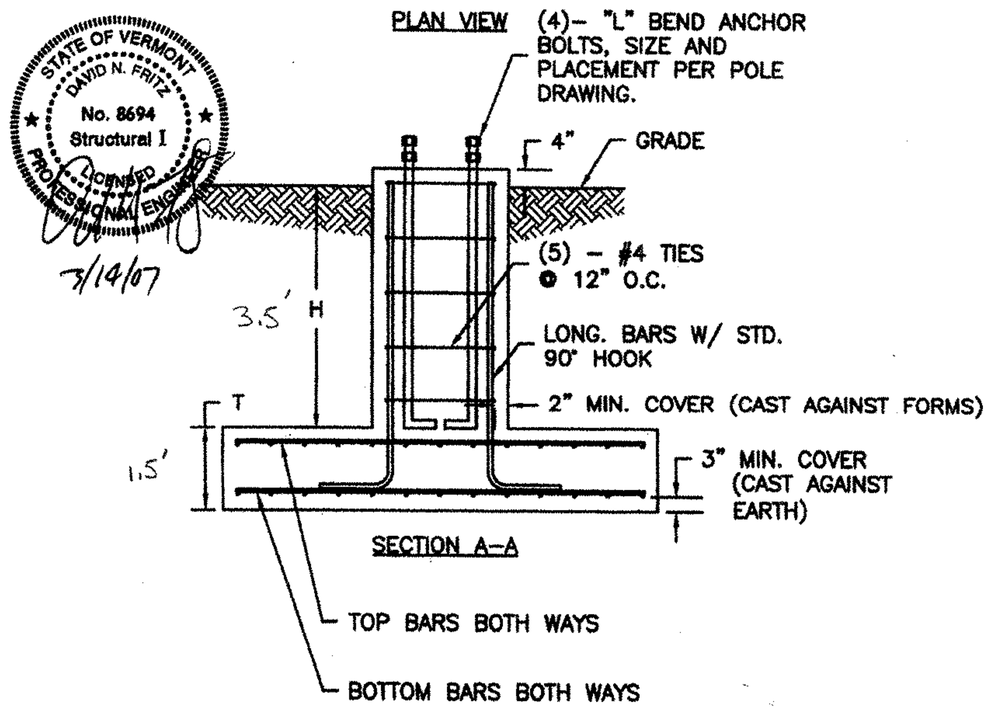

SECTION A–A

STATE OF VERMONT
DAVID N. FRITZ
No. 8694
Structural I
LICENSED PROFESSIONAL ENGINEER

3/14/07

TRAFFIC SIGNAL POLE FOUNDATION DESIGN
ROUTE 15 & 128, ESSEX, VERMONT
ESSEX STPG SGNL (17)
DRAWING NO. 031407