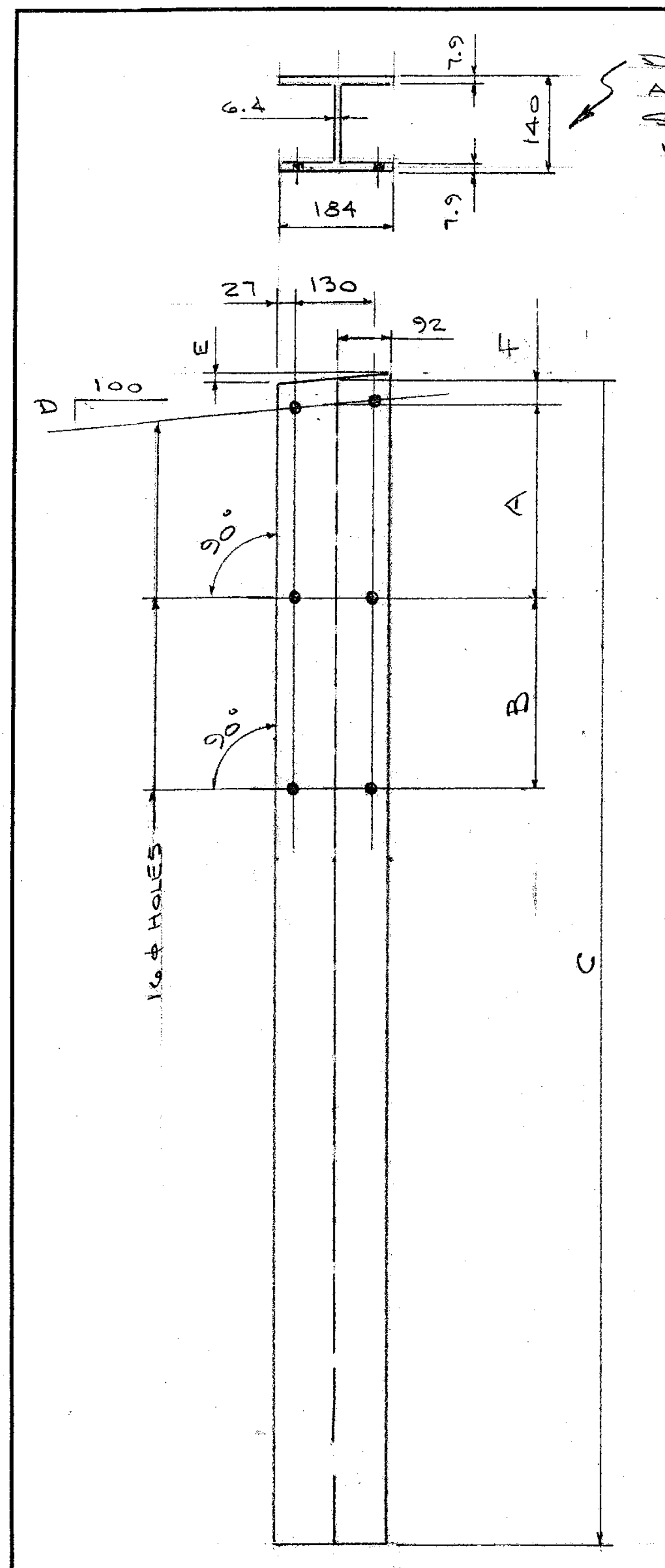
7.9
6.4
140
7.9
184
27
130
92
E
4
D
100
A
90°
B
90°
16ø HOLES
C

DIM'S TYPICAL AT ALL APPROACH POSTS AND STANDOFFS
MATERIAL: ALLOY 6061-T6

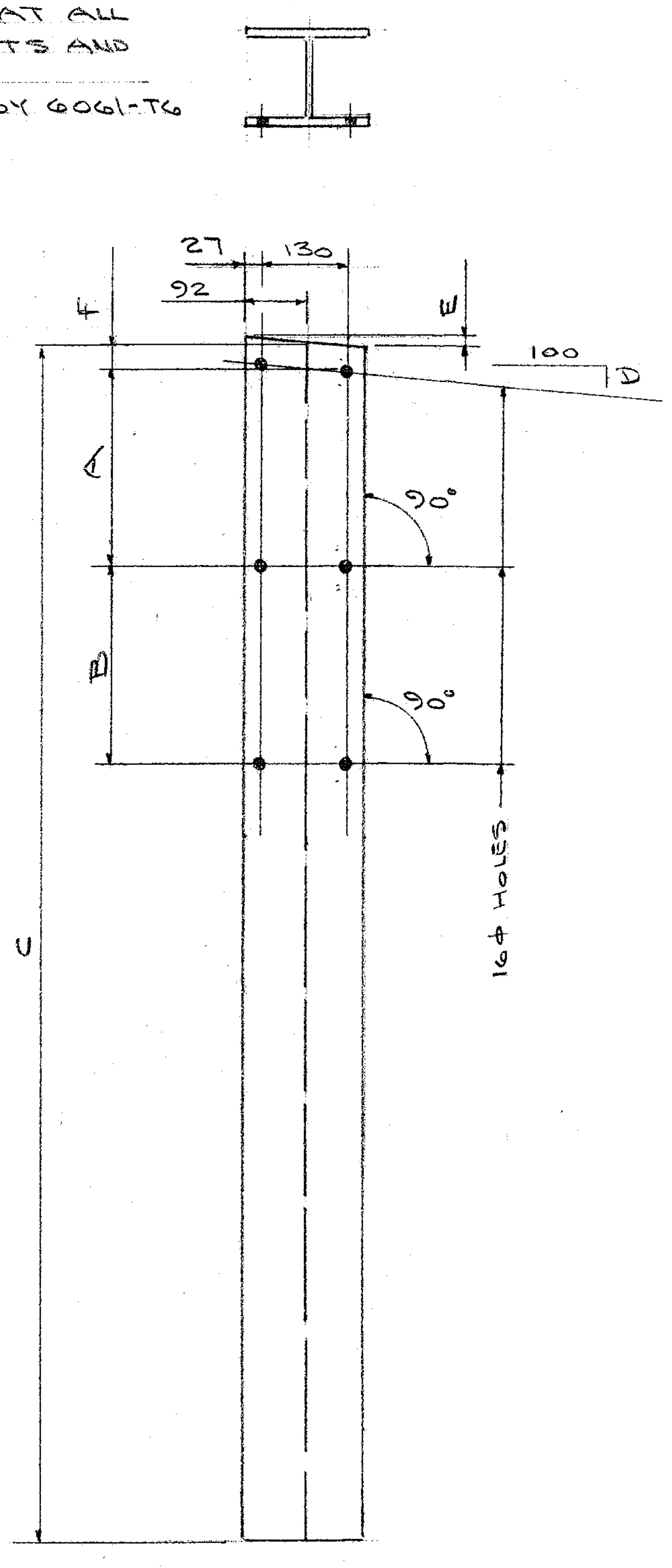
27
130
92
4
E
100
D
A
90°
B
90°
16ø HOLES
C

APPROACH POSTS

QUAN	MK	A	B	C	D	E	F
1	21L	290	328	1980	5.5	11	40
1	22L	248	323	1980	5.5	11	40
1	23L	204	319	1980	5.5	11	40
1	24L	161	315	1980	5.5	11	40
1	25L	308	0	1830	1.0	2	51
1	26L	302	0	1830	1.0	2	51
1	27L	295	0	1830	1.0	2	51

APPROACH POSTS

QUAN	MK	A	B	C	D	E	F
1	21R	290	328	1980	5.5	11	40
1	22R	248	323	1980	5.5	11	40
1	23R	204	319	1980	5.5	11	40
1	24R	161	315	1980	5.5	11	40
1	25R	308	0	1830	1.0	2	51
1	26R	302	0	1830	1.0	2	51
1	27R	295	0	1830	1.0	2	51

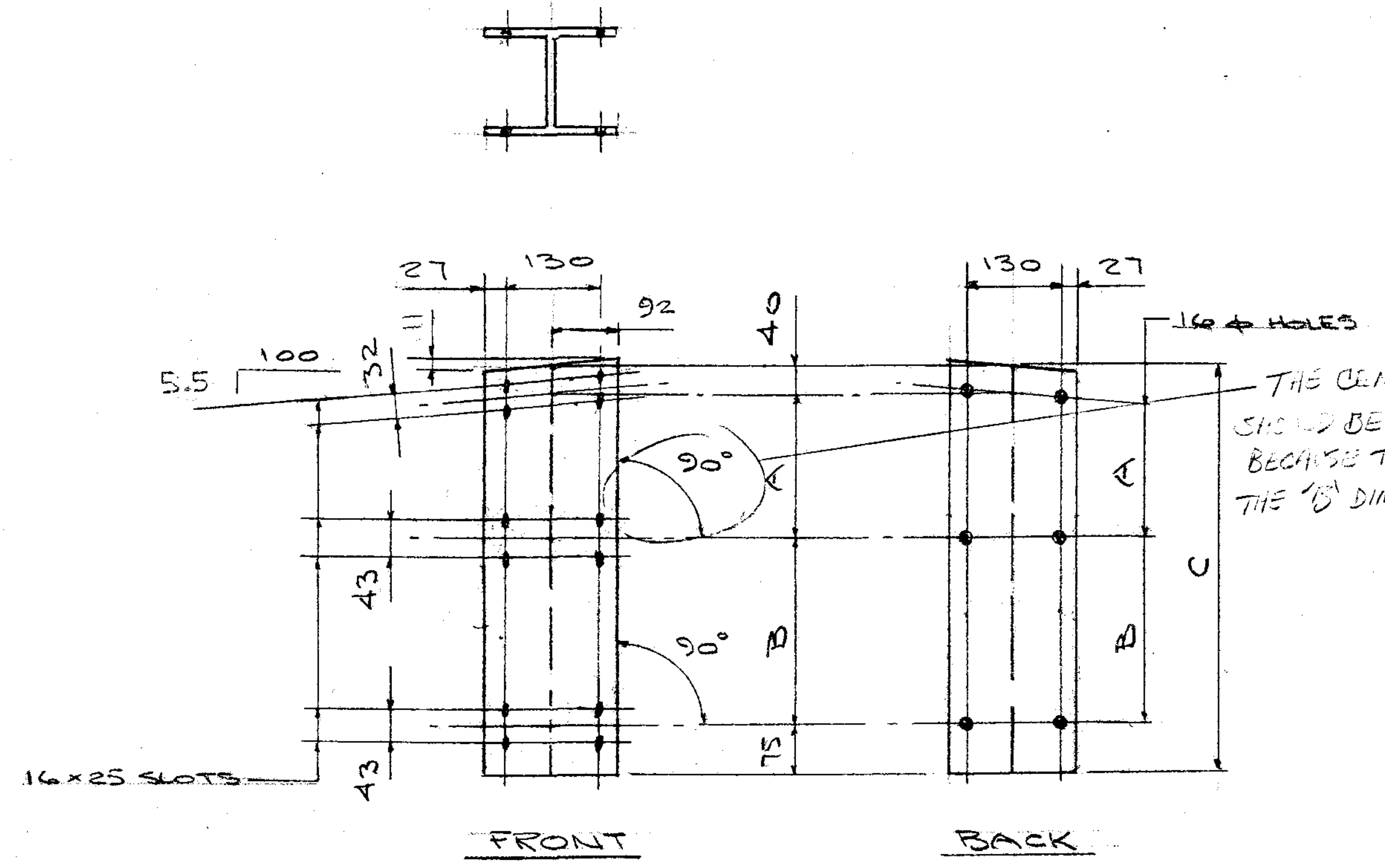
27
130
92
11
40
5.5
100
32
90°
A
43
90°
B
16×25 SLOTS
43
75
130
27
16ø HOLES
A
B
C
FRONT
BACK

THE CENTER ROW OF BOLT HOLES SHOULD BE ANGLED STRAIGHT BECAUSE THE RAILING IS ANGLED AND THE "B" DIMENSION IS VARYING

STANDOFFS

QUAN	MK	A	B	C		
1	A21L	290	328	733		
1	A22L	248	323	686		
1	A23L	204	319	638		
1	A24L	161	315	591		

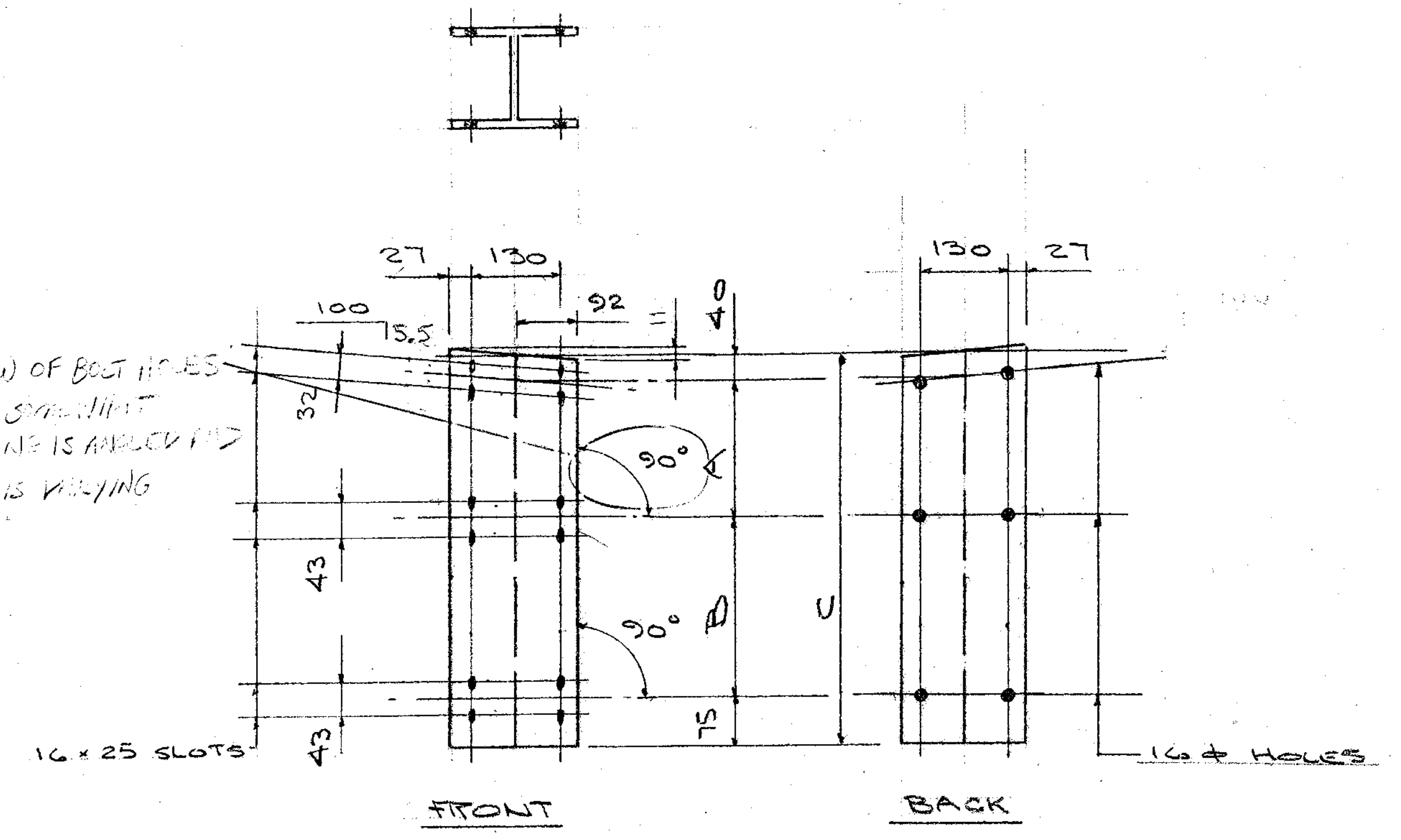
27
130
100
5.5
92
11
40
32
90°
A
43
90°
B
C
16×25 SLOTS
43
75
130
27
16ø HOLES
FRONT
BACK

STANDOFFS

QUAN	MK	A	B	C		
1	A21R	290	328	733		
1	A22R	248	323	686		
1	A23R	204	319	638		
1	A24R	161	315	591		

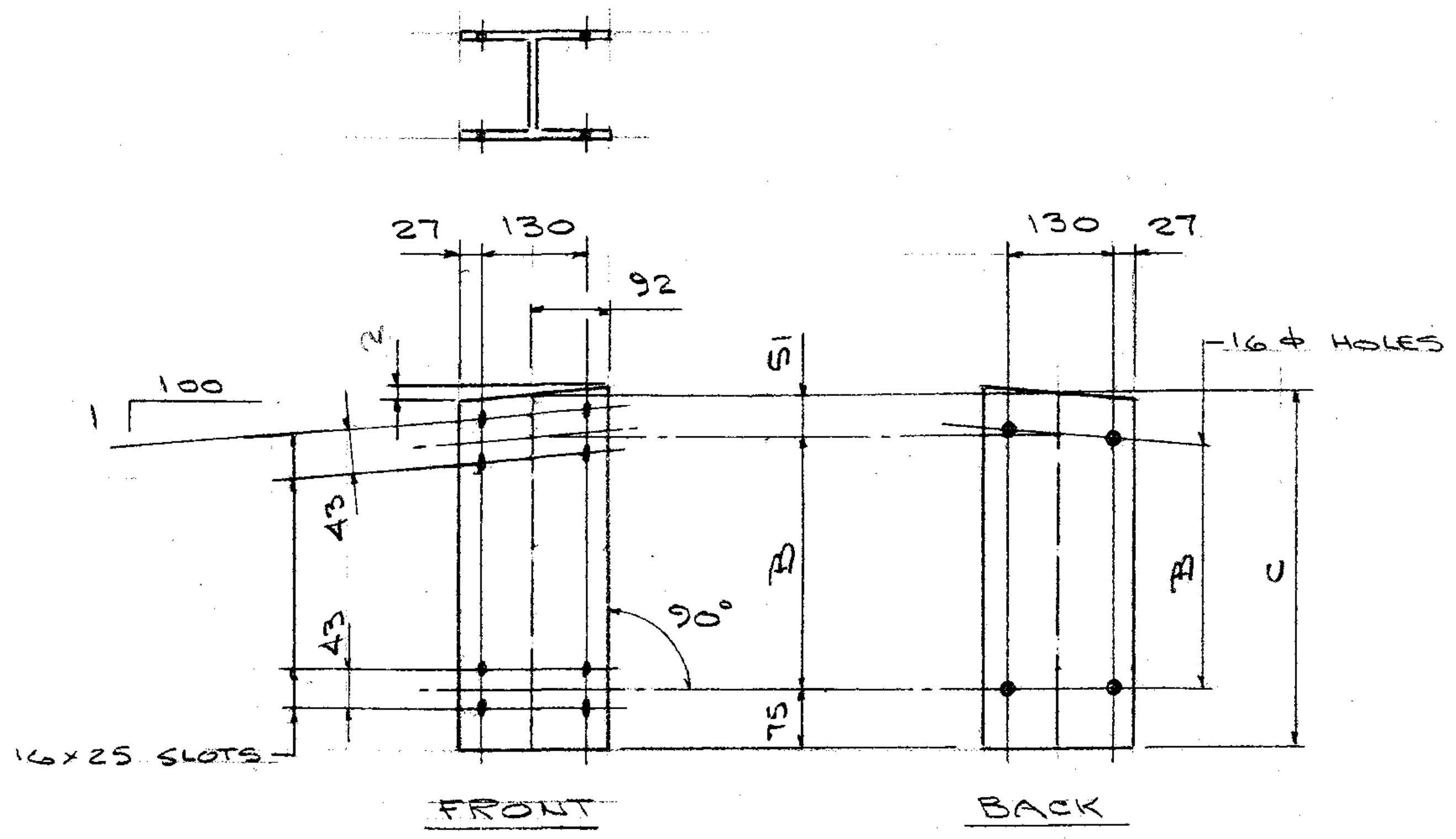
27
130
92
2
51
1
100
43
B
90°
43
16×25 SLOTS
75
130
27
16ø HOLES
B
C
FRONT
BACK

STANDOFFS

QUAN	MK	B	C		
1	A25L	308	434		
1	A26L	302	428		
1	A27L	295	421		

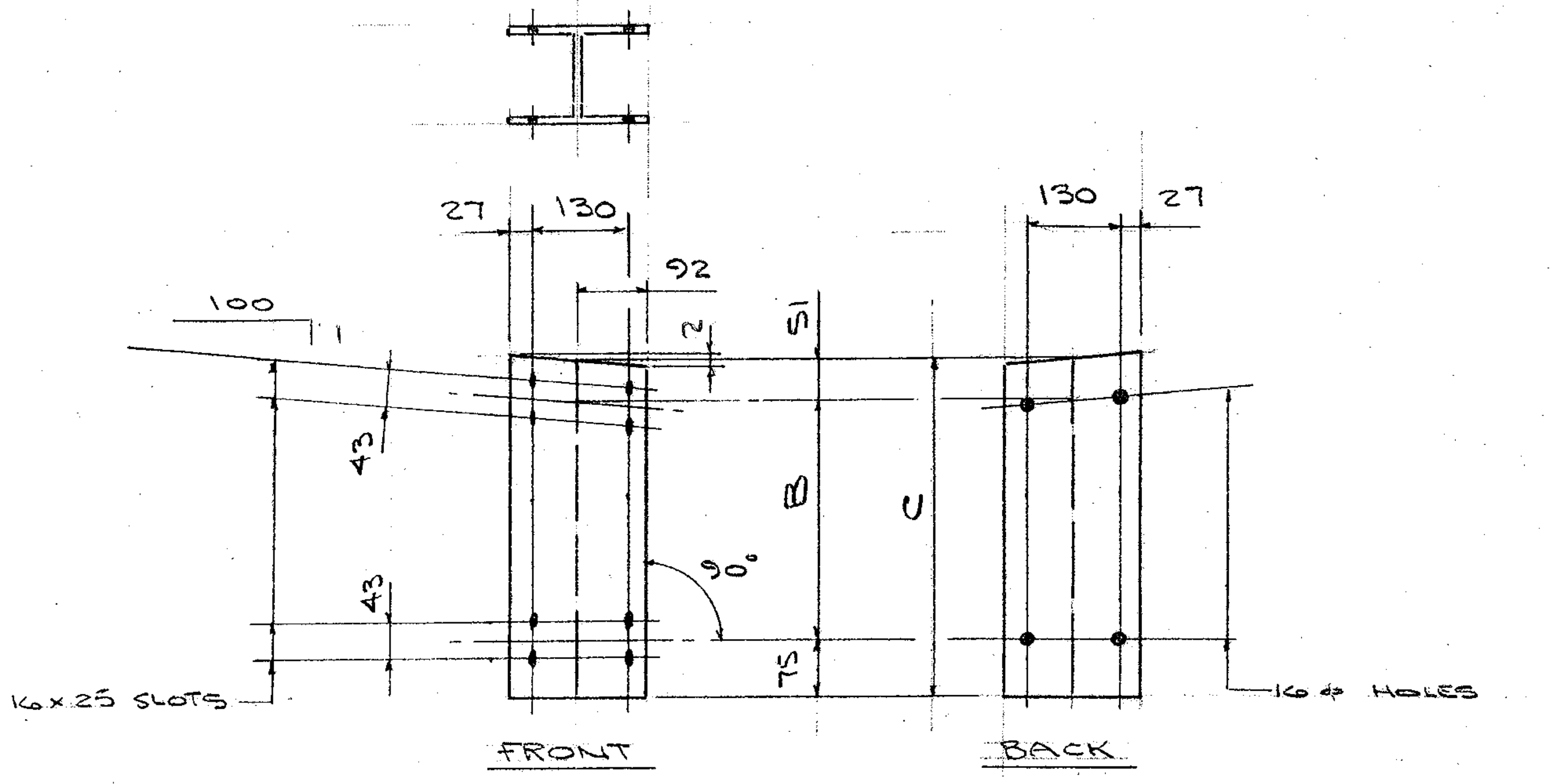
27
130
92
100
1
2
51
43
B
C
90°
43
75
16×25 SLOTS
130
27
16ø HOLES
FRONT
BACK

STANDOFFS

QUAN	MK	B	C		
1	A25R	308	434		
1	A26R	302	428		
1	A27R	295	421		

RECEIVED
OK'D BY ______ OK'D BY ______

DIM'S ARE GIVEN IN MILIMETERS

ISSUE	DATE	DESCRIPTION	BY
1	9/24/09	FOR APPROVAL	B

AUCIELLO IRON WORKS INC
560 MAIN ST. HUDSON, MA (978) 568-8382

VT. AGENCY OF TRANSPORTATION
HARDWICK #BHF 030-2(18)S
BRIDGE # 67
VT15 OVER COOPER BROOK

APPROACH POSTS AT SIDEWALK

SURFACE PREP: NONE
FINISH: BLACK ANODIZE
FOR: F.R. LAFAYETTE, INC.
DR: WM 9-24-09
CHK: B 9-24-09
DWG. NO. BR-2965
JOB NO. AB07010-1001
SHEET F2 OF 6

B.L. MAKEPEACE INC. 106616