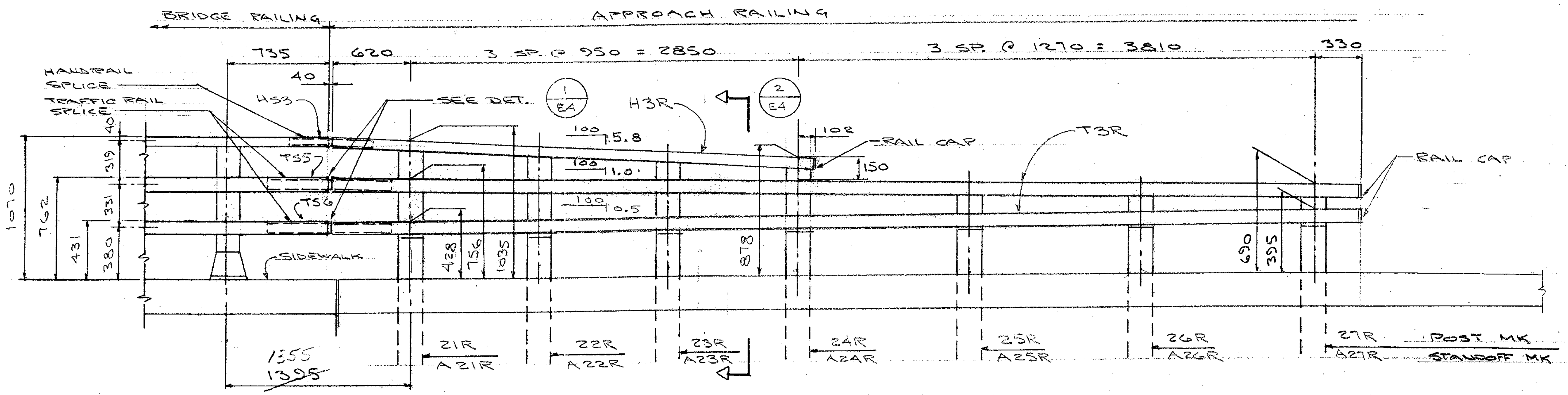

BRIDGE RAILING
APPROACH RAILING
735
620
3 SP. @ 950 = 2850
3 SP. @ 1270 = 3810
330
HANDRAIL SPLICE
TRAFFIC RAIL SPLICE
40
H53
SEE DET. 1/E4
H3R
2/E4
100 5.8
100 11.0
100 10.5
102
RAIL CAP
150
T3R
RAIL CAP
TS5
TS6
1070
762
431
380
331
319
40
SIDEWALK
428
756
1035
878
690
395
1355
~~1395~~
21R A21R
22R A22R
23R A23R
24R A24R
25R A25R
26R A26R
27R A27R
POST MK
STANDOFF MK

APPROACH RAILING AT SIDEWALK

NW AS SHOWN
SW OPP. HAND

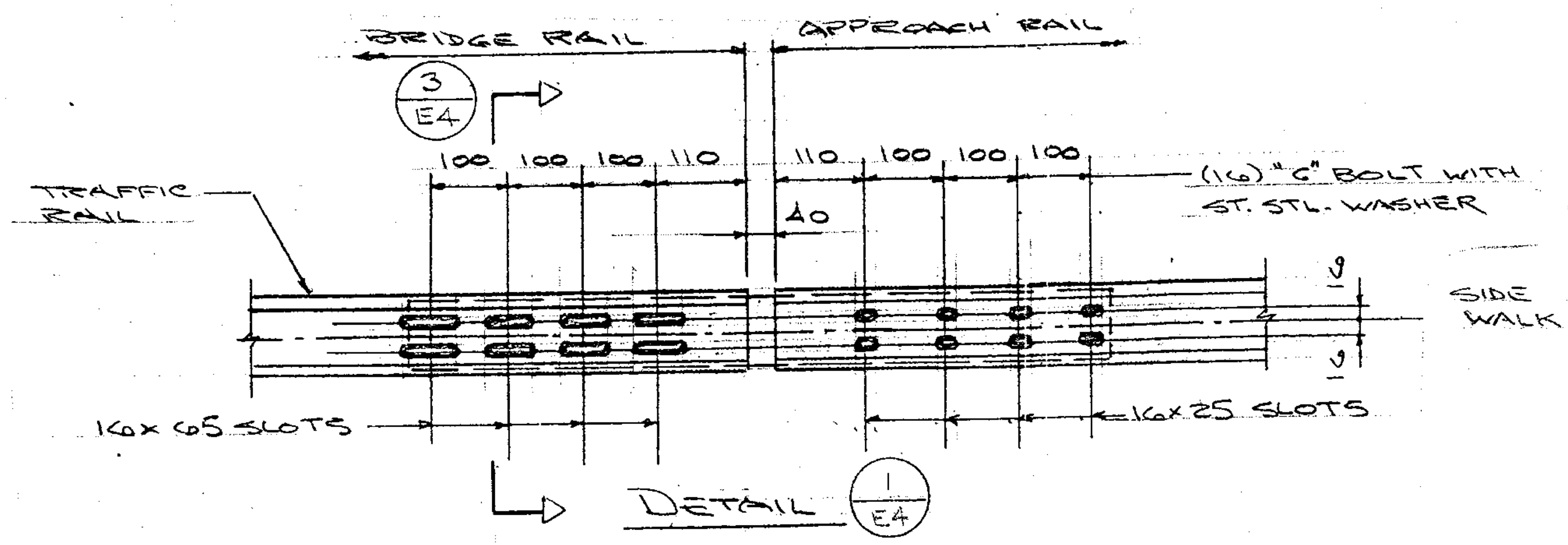

BRIDGE RAIL
APPROACH RAIL
3/E4
100
100
100
110
110
100
100
100
40
TRAFFIC RAIL
(16) "C" BOLT WITH ST. STL. WASHER
9
9
16x 65 SLOTS
16x 25 SLOTS

DETAIL 1/E4

OUTBOARD VIEW

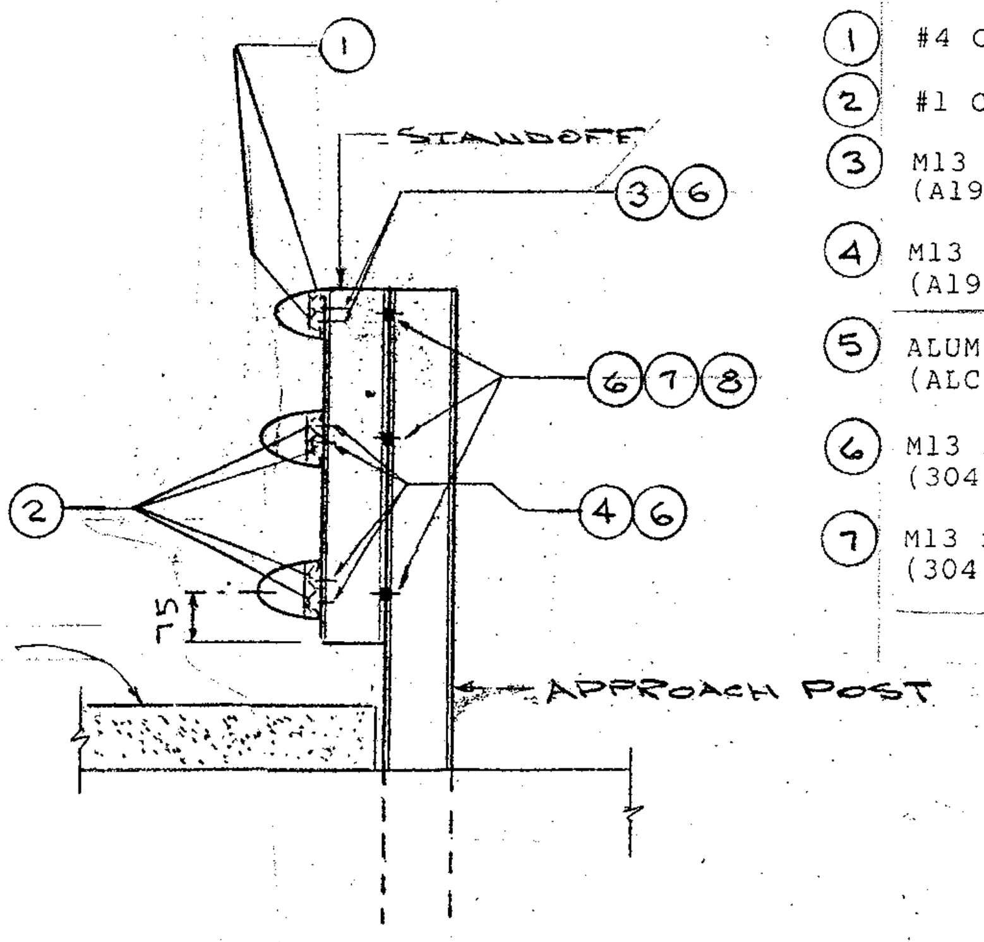

1
STANDOFF
3 6
6 7 8
2
4 6
75
SIDE WALK
APPROACH POST

SECTION 2/E4

① #4 CLAMP BAR

② #1 CLAMP BAR

③ M13 x 2 x 20 HEX HD CAP SCREW (A193, GRADE B8)

④ M13 x 2 x 25 HEX HD CAP SCREW (A193, GRADE B8)

⑤ ALUM. WASHER 27 O.D. x 14 I.D. x 2.3 THK. (ALCLAD 2024-T4)

⑥ M13 x 2 x 38 HEX HD CAP SCREW (304 ST. STL.)

⑦ M13 x 2 HEX NUT (304 ST. STL.)

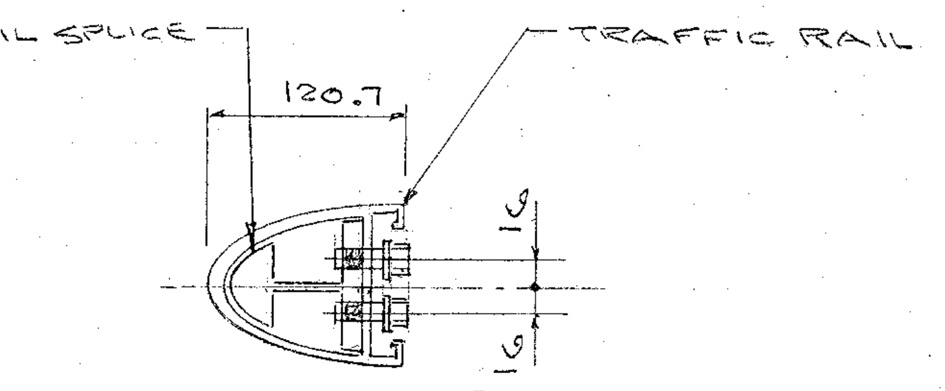

RAIL SPLICE
TRAFFIC RAIL
120.7
16
16

SECT. 3/E4

NOTE
DIM'S. ARE GIVEN ALONG NOSE OF TRAFFIC RAIL

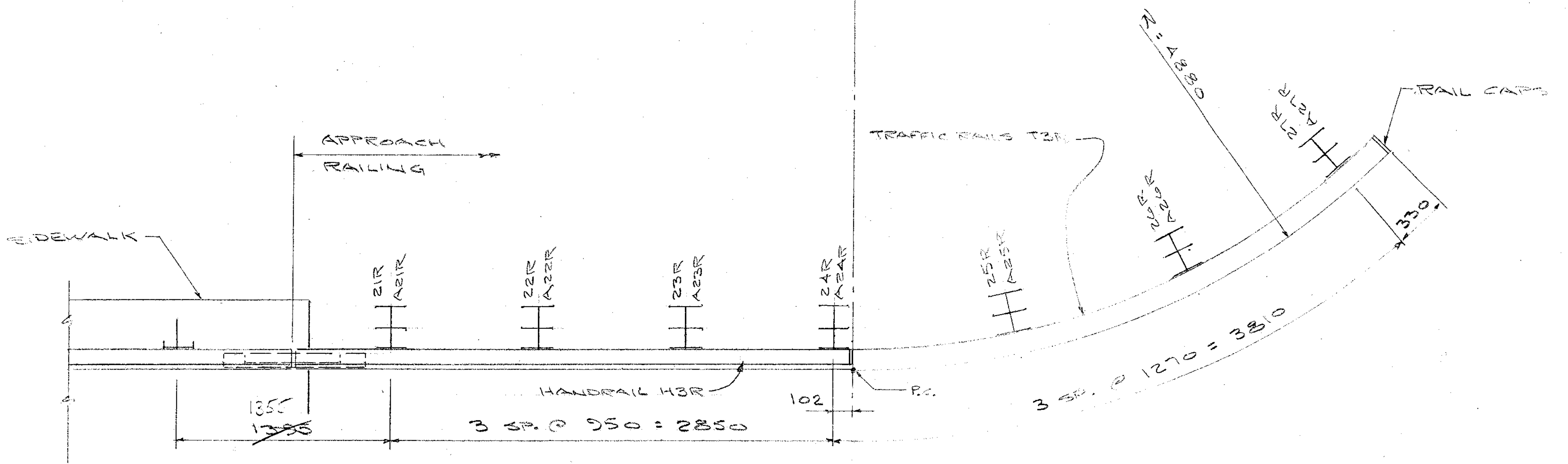

APPROACH RAILING
SIDEWALK
21R A21R
22R A22R
23R A23R
24R A24R
25R A25R
26R A26R
27R A27R
R = 4880
RAIL CAPS
TRAFFIC RAILS T3R
330
HANDRAIL H3R
P.C.
102
1355
~~1395~~
3 SP. @ 950 = 2850
3 SP. @ 1270 = 3810

PLAN AT NW APPROACH RAIL (AS SHOWN)
PLAN AT SW APPROACH RAIL (OPP. HAND)

RECEIVED
CK'D BY ______ OK'D BY ______
SEP [illegible]

DIM'S ARE GIVEN IN MILIMETERS

AUCIELLO IRON WORKS INC
560 MAIN ST. HUDSON, MA (978) 568-8382

VT. AGENCY OF TRANSPORTATION
HARDWICK #BHF 030-2(18)S
BRIDGE # 67
VT 15 OVER COOPER BROOK

APPROACH RAIL AT SIDEWALK

SURFACE PREP: NONE
FINISH: BLACK ANODIZE
FOR: F.R. LAFAYETTE, INC
DR: WM 9-9-09
CHK: B 9-24-09
JOB NO. AB07010-1001
DWG. NO. BR-2965
SHEET E4 OF 4

ISSUE	DATE	DESCRIPTION	BY
1	9-24-09	FOR APPROVAL	B

B.L. MAKEPEACE INC. 106616