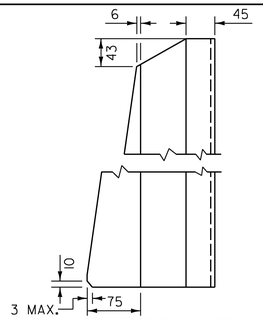

POST SIDE VIEW

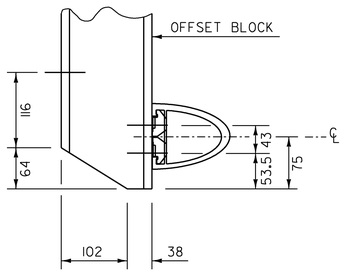

COPING DETAIL

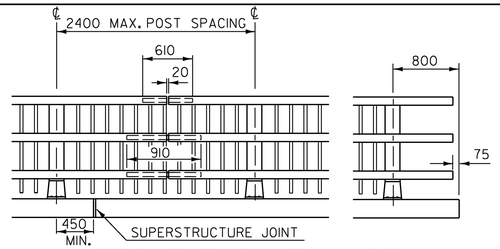

FRONT ELEVATION OF THREE RAIL WITH SPINDLES

NOTE : RAIL POSTS ARE TO BE SET NORMAL TO GRADE UNLESS OTHERWISE DESIGNATED ON BRIDGE PLANS. ALL DIMENSIONS ARE TYPICAL UNLESS OTHERWISE DESIGNATED ON BRIDGE PLANS.

THIS REFLECTORIZED ALUMINUM DELINEATOR IS TO BE ERECTED EVERY 9 m (OR CLOSEST POST) WITH 2 M4 X 0.7 X 20 SET SCREWS.

DELINEATORS SHALL MEET SPECIFICATION REQUIREMENTS FOR ASTM B 209M ALLOY 5052-H32.

REFLECTIVE MATERIAL SHALL MEET THE REQUIREMENTS OF SUBSECTION 750.08 AND SHALL BE OF ENCAPSULATED LENS SILVER OR AMBER. AMBER IS TO BE INSTALLED ON THE DRIVER'S LEFT AND SILVER ON THEIR RIGHT.

PAYMENT SHALL BE INCLUDED IN COST OF BRIDGE RAILING.

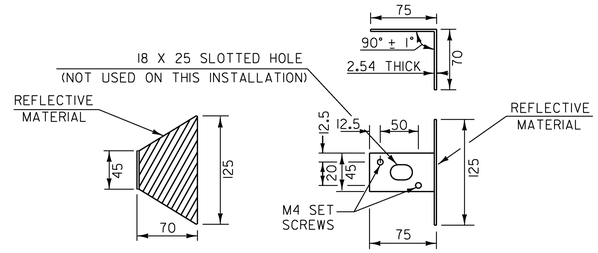

REFLECTOR DETAILS

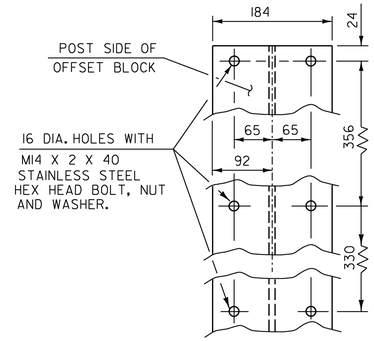

OFFSET BLOCK CONNECTION

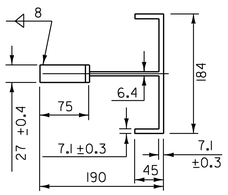

POST PLAN VIEW

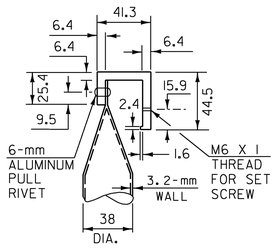

DETAIL A

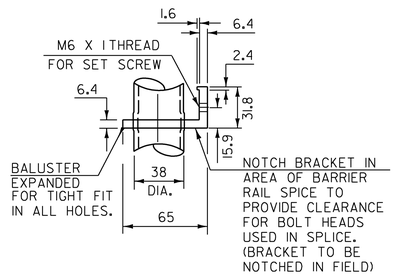

DETAIL B

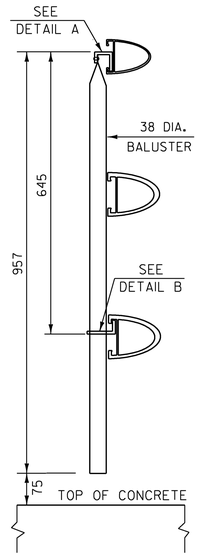

SECTION GG-GG

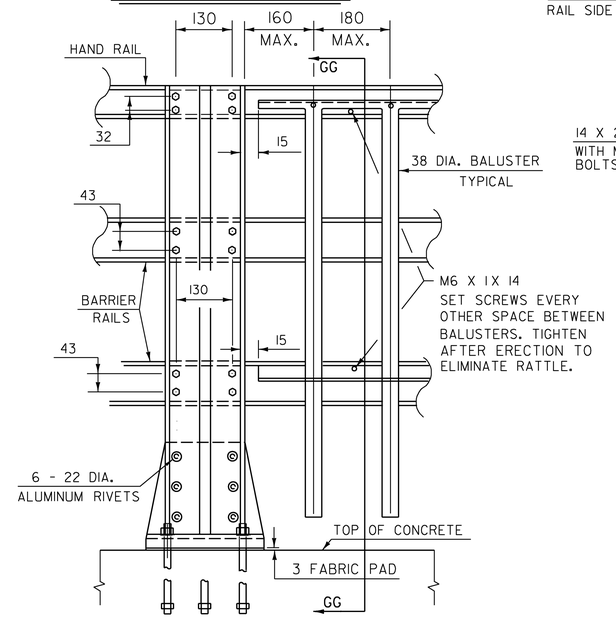

OUTSIDE ELEVATION OF THREE RAIL POST & SPINDLES

DETAILS OF SPINDLES FOR ALUMINUM RAILING

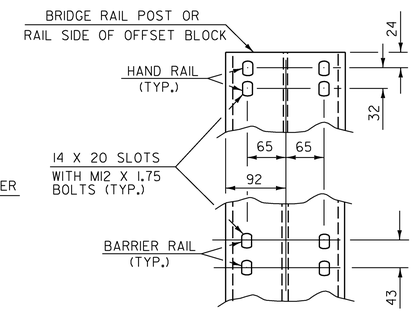

RAIL CONNECTION

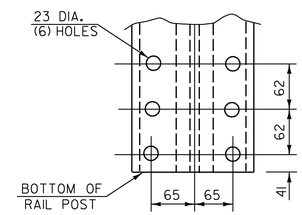

POST BASE BOLT HOLE DETAILS

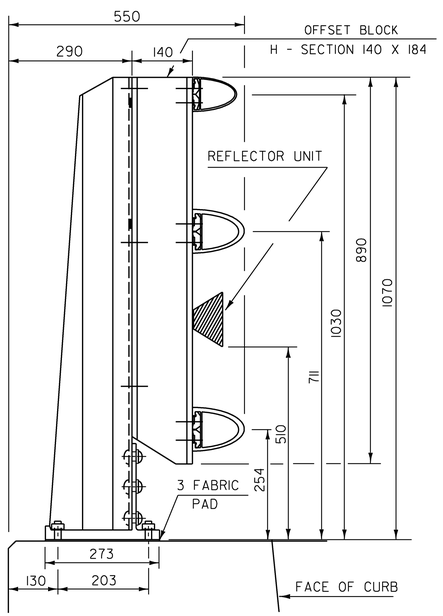

SIDE ELEVATION OF THREE RAIL TO BE USED ON CURB SIDE

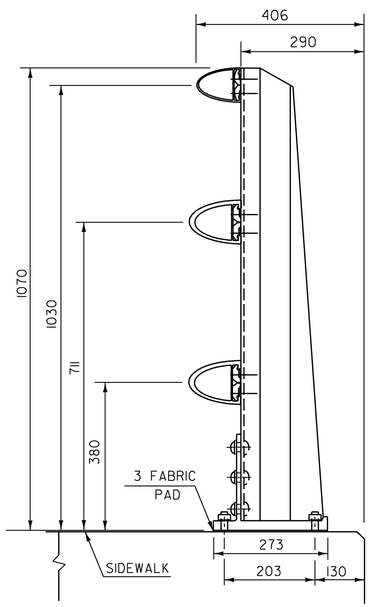

SIDE ELEVATION OF THREE RAIL TO BE USED ON SIDEWALK SIDE

RAIL POST DETAILS ON SUPERSTRUCTURE

PLOTTED $$$$DATE$$$

DuBois & King inc.
engineering planning management development

STATE OF VERMONT
AGENCY OF TRANSPORTATION

Town Of HARDWICK	Bridge No. 67
Highway No. VT 15	Log Sta. / Surv. Sta.
VT 15 OVER COOPER BROOK	
ALUMINUM RAILING DETAILS 2	
Designed By A.P. GUYETTE	Drawn By P.G. JARVIS
Checked By E. P. DETRICK Date 11/08	Bridge Design Supervisor J.W.TUCKER Date 11/08
PROJECT HARDWICK	PROJECT NO. BHF 030-2 (18) S
I.G.C. Info. DGN$SPEC$	
Bridge Sheet No.	Sheet 29 of 38

I:\R16411\dgn\z95j306rai.dgn 12/1/2008 9:40:26 AM