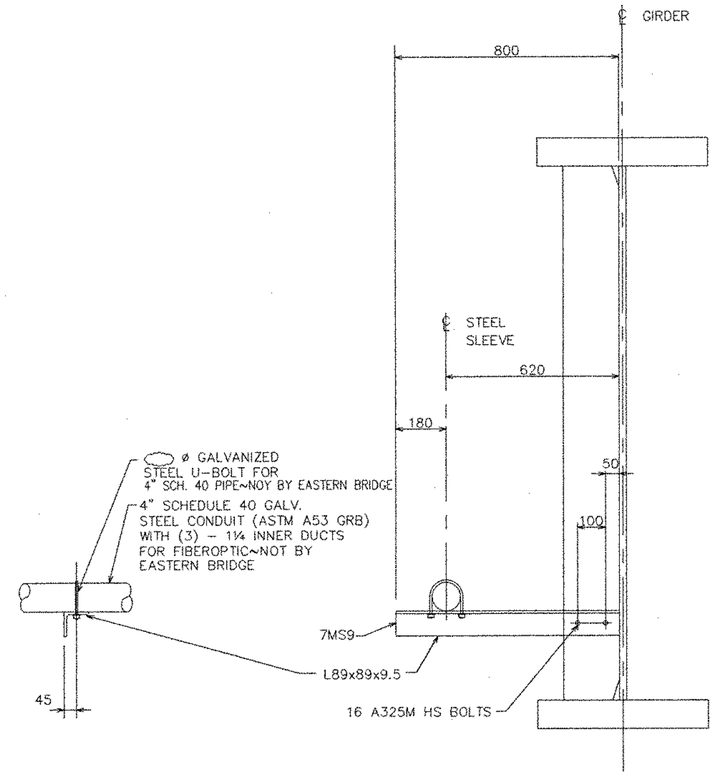

FIBEROPTIC CONDUIT SUPPORT DETAIL

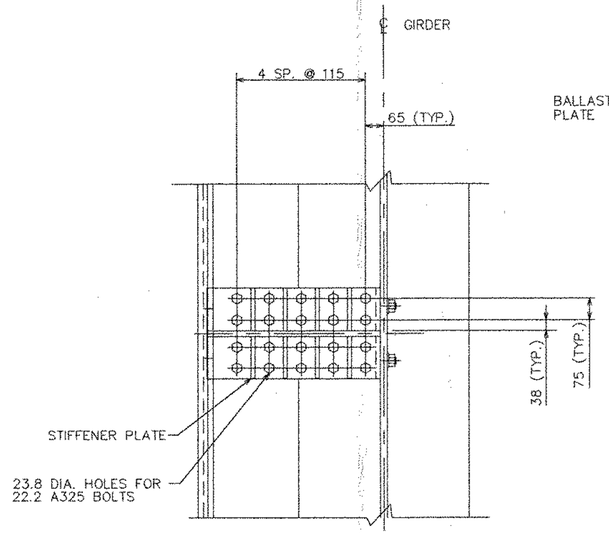

SECTION 1–1

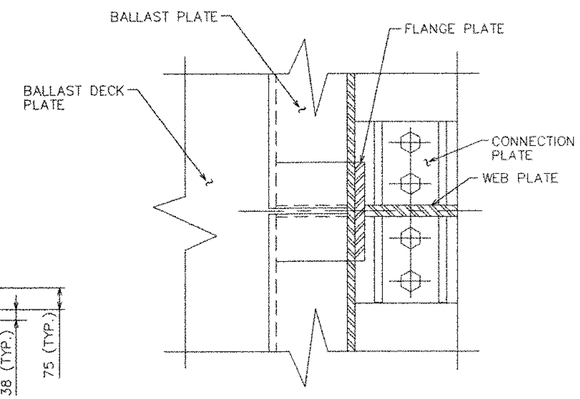

SECTION 3–3

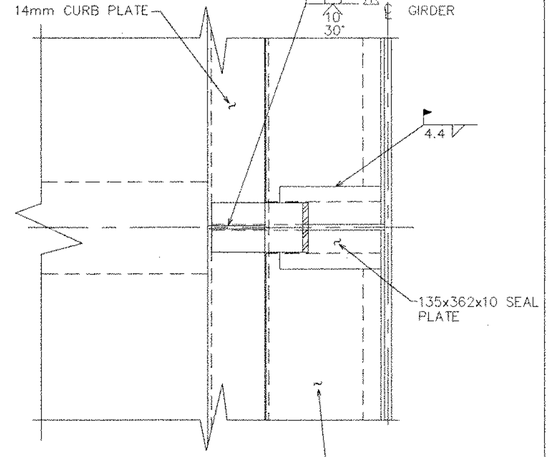

SECTION 4–4

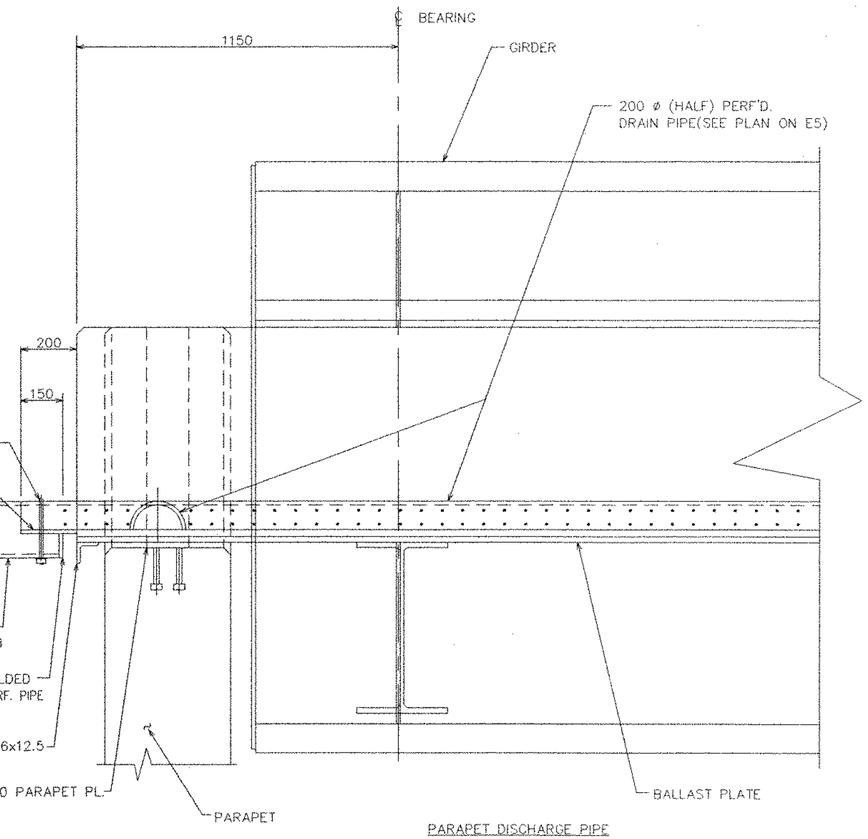

PARAPET DISCHARGE PIPE CONNECTION DETAIL

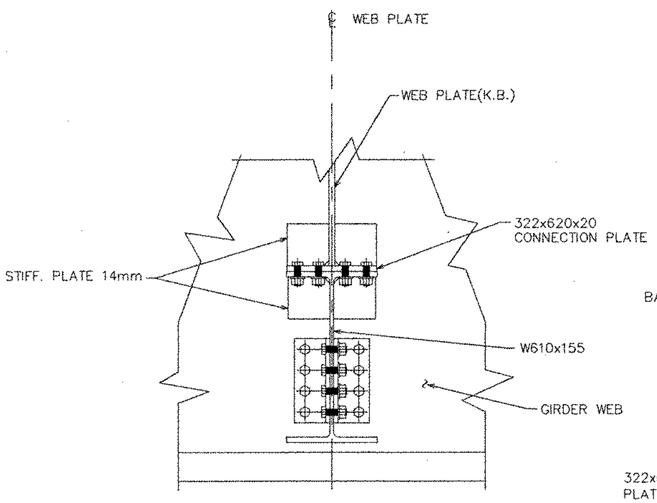

SECTION 2–2

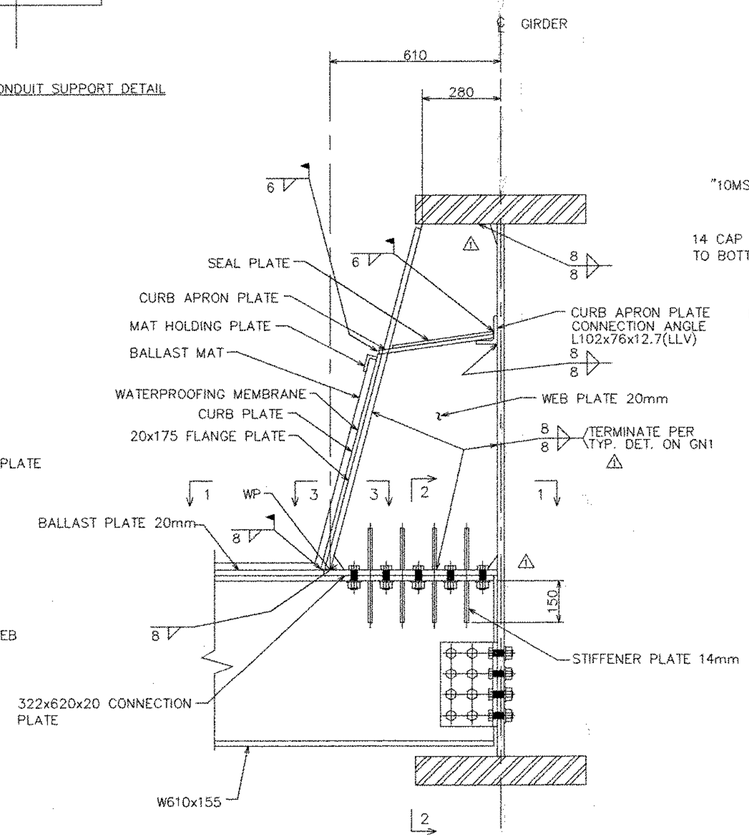

KNEE BRACE CONNECTION DETAIL

REVISIONS		
NO.	DATE	DESCRIPTION
1	6/24/03	PER APPROVAL
	8/4/03	Approval

STEEL-ART, INCORPORATED
40 WEST MAIN STREET
GALETON, PA 16922
(814) 435-6997

EASTERN BRIDGE LLC
RURAL RTE 2, BOX 302
CLAREMONT, NH 03743
603-542-5202

STATE OF VERMONT
AGENCY OF TRANSPORTATION

CONTRACT : PIN :

PROPOSED IMPROVEMENT TO RR BRIDGE #62.56 OVER VT ROUTE 9 (PRINCIPAL ARTERIAL) WINDHAM COUNTY, TOWN OF BRATTLEBORO

TITLE

SECTIONS & DETAILS

DRAWN BY	SHOP ORDER	DWG. NO.
DAN 3/19/03	4015	E3
CKD BY RJS 4/14/03	BLOCK NO.	SHEET NO 4 / 20

18855