Metric

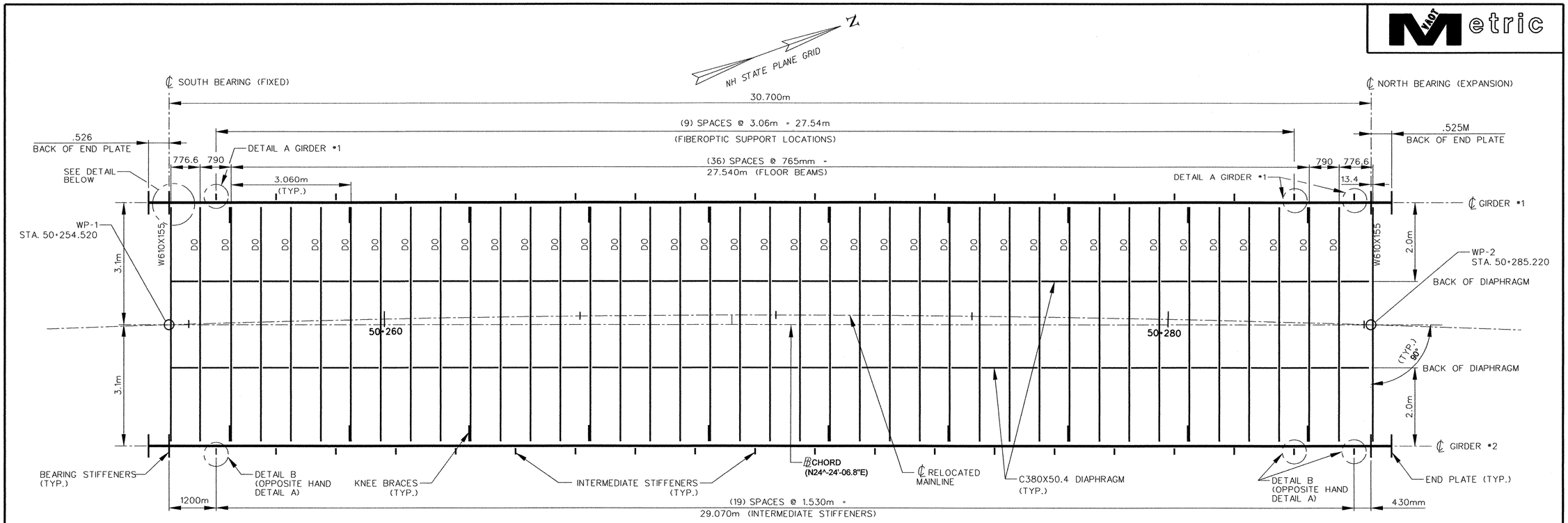

FRAMING PLAN

SCALE: 1:50

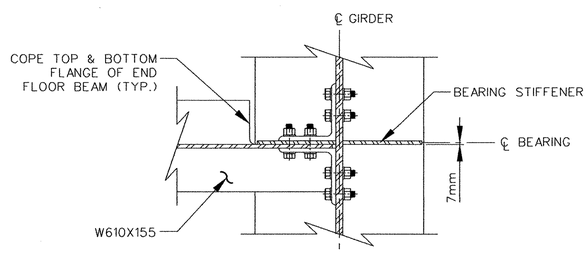

SECTION 2-2

SCALE: 1:10

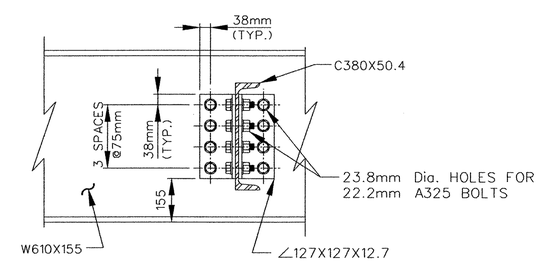

DIAPHRAGM CONNECTION DETAIL

SCALE: 1:10

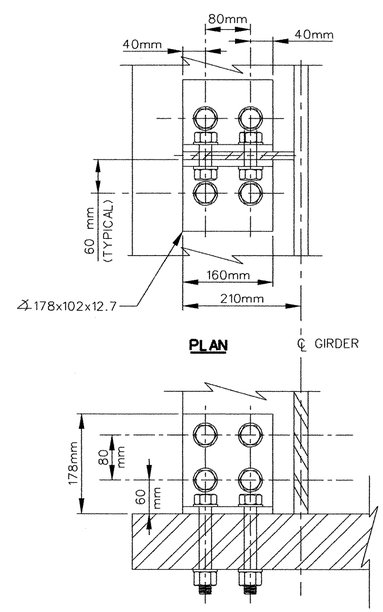

DETAIL A
BOLTING OF INTERMEDIATE STIFFENER NEAR BEARING

SCALE 1:5

NOTE: DETAIL B (OPPOSITE HAND)

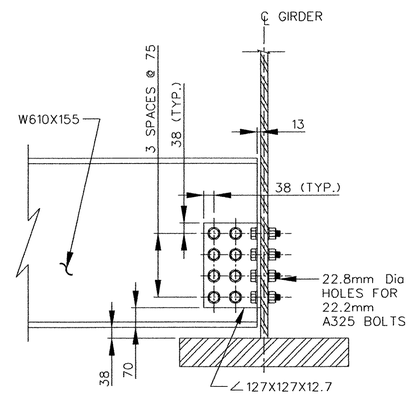

FLOOR BEAM CONNECTION DETAIL

SCALE 1:10

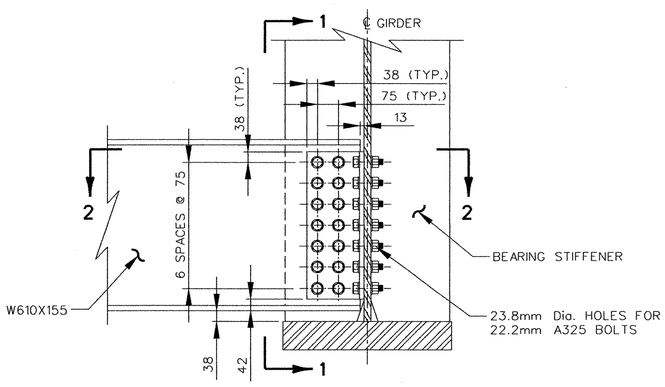

END FLOOR BEAM CONNECTION DETAIL

SCALE 1:10

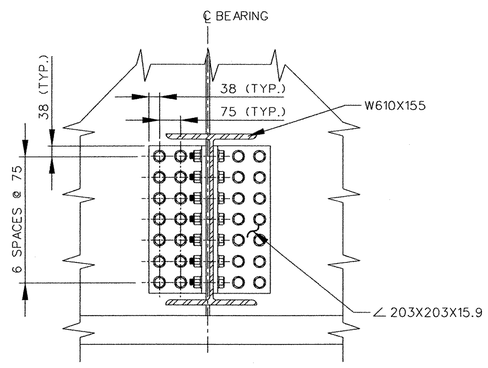

SECTION 1-1

SCALE: 1:10

Plot Date: 10-28-2002
File: rt9br150

STATE OF VERMONT
AGENCY OF TRANSPORTATION

Town Of	BRATTLEBORO	Bridge No.	62.56
Highway No.	VT. ROUTE 9	Log Sta. / Surv. Sta.	
ROUTE 9 BRIDGE			
FRAMING PLAN & CONNECTION DETAILS			
Designed By LM		Drawn By DHL/LRD	
Checked By GJB Date		Bridge Design Supervisor JHR Date	
PROJECT BRATTLEBORO		PROJECT NO. NH 010-2(2)	
I.G.C. Info.			
Bridge Sheet No. 2		Sheet 70 of 145	