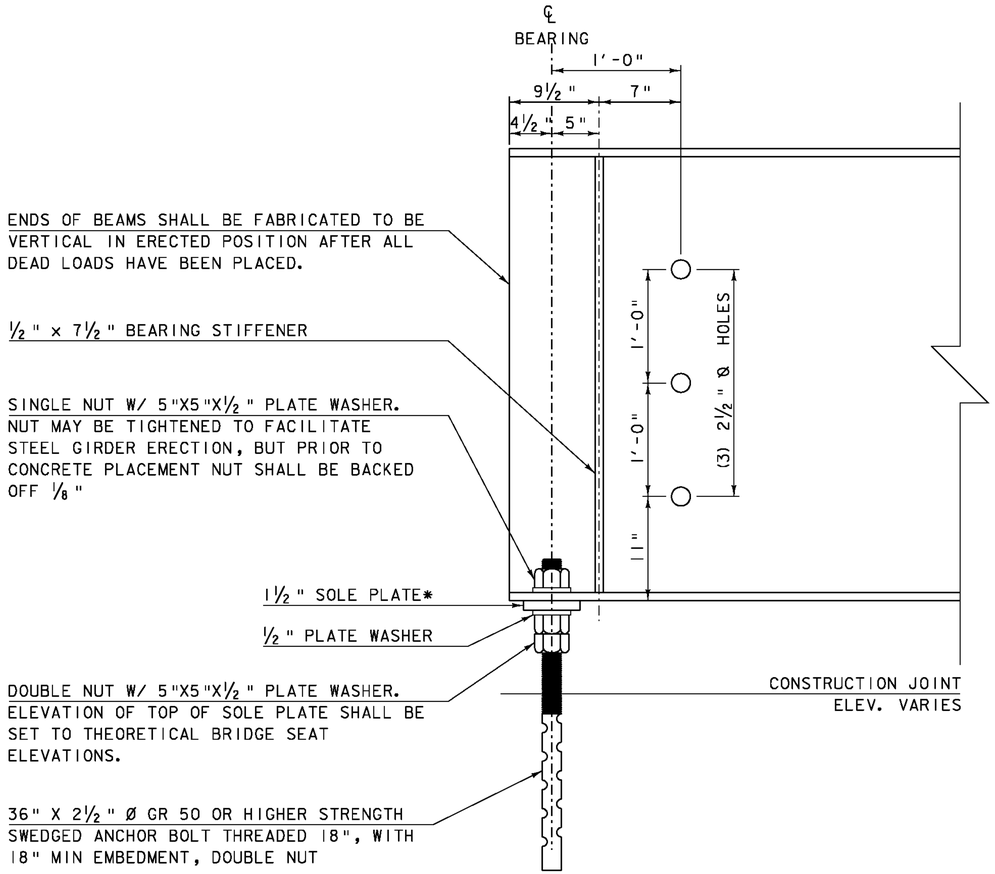

ELEVATION VIEW END OF STEEL MEMBER AT ABUTMENT

SCALE 1 ½" = 1'-0

NOTES:

1. THE SOLE PLATES, ANCHOR BOLTS, WASHERS AND NUTS SHALL BE PAID FOR UNDER ITEM 531.14, "BEARING DEVICE ASSEMBLY, INTEGRAL ABUTMENT" AND SHALL CONFORM TO SECTION 531.
2. ANCHOR BOLTS SHALL BE 2½" DIAMETER, TYPE 1 BOLTS MEETING ASTM A449. NUTS SHALL MEET AASHTO M291. THE CONTRACTOR SHALL ENSURE THAT THE ANCHOR BOLTS ARE INSTALLED IN A PLUMB POSITION. ONE EXTRA ANCHOR BOLT SHALL BE SUPPLIED FOR TESTING PURPOSES.
3. ALL STEEL IN BEARING DEVICE ASSEMBLY SHALL BE AASHTO M270M/M270 GR 36 UNLESS OTHERWISE NOTED.
4. SUBSTITUTIONS FOR BEARING DEVICE ASSEMBLY COMPONENT MATERIALS AND SIZES SHALL BE DETAILED ON THE FABRICATION DRAWINGS. ALL SUBSTITUTIONS SHALL BE APPROVED BY THE PROJECT MANAGER PRIOR TO FABRICATION AS PER SUBSECTION 506.04.

THEORETICAL TOP OF SOLE PLATE ELEVATIONS		
ABUTMENT #1	ABUTMENT #2	
581.50	580.17	GIRDER 1
581.61	580.39	GIRDER 2
581.72	580.59	GIRDER 3
581.83	580.80	GIRDER 4
581.86	580.92	GIRDER 5
581.97	581.11	GIRDER 6
582.07	581.30	GIRDER 7

*GREASE TOP OF SOLE PLATE BEFORE GIRDER PLACEMENT

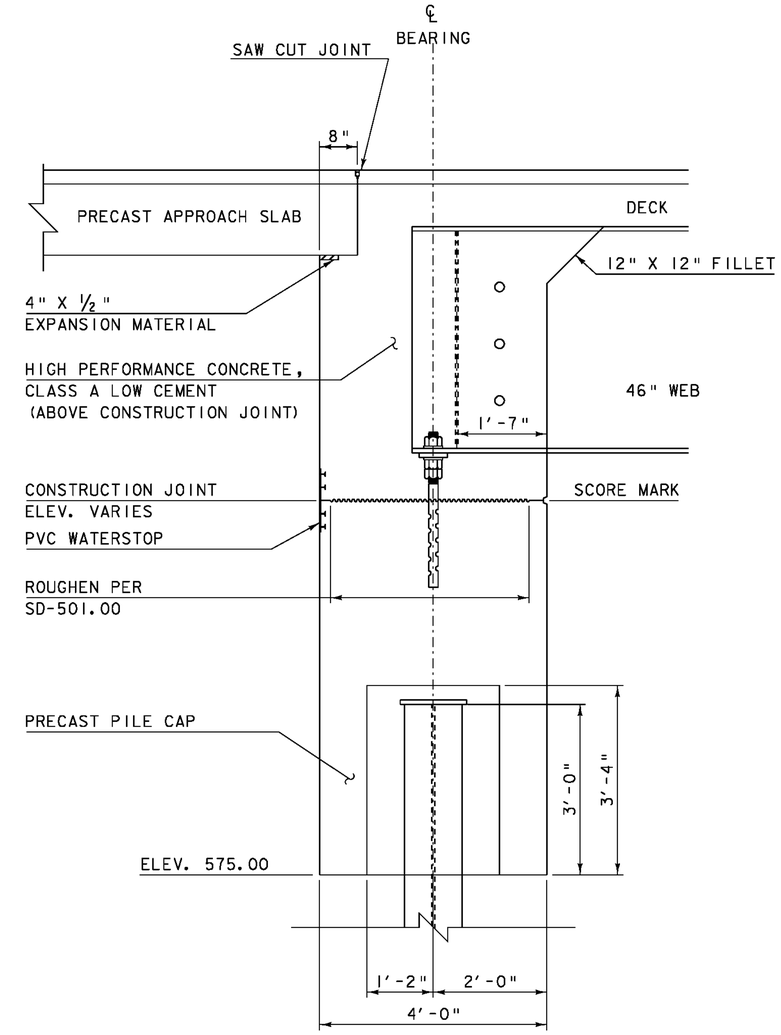

BRIDGE END DETAIL AND ABUTMENT TYPICAL SECTION

SCALE ¾" = 1'-0

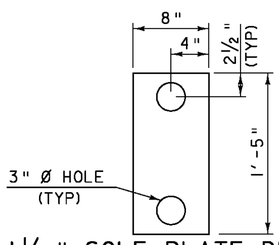

1½" SOLE PLATE DETAIL

SCALE 1 ½" = 1'-0

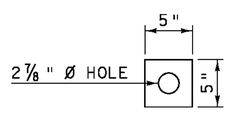

½" PLATE WASHER DETAIL

SCALE 1 ½" = 1'-0

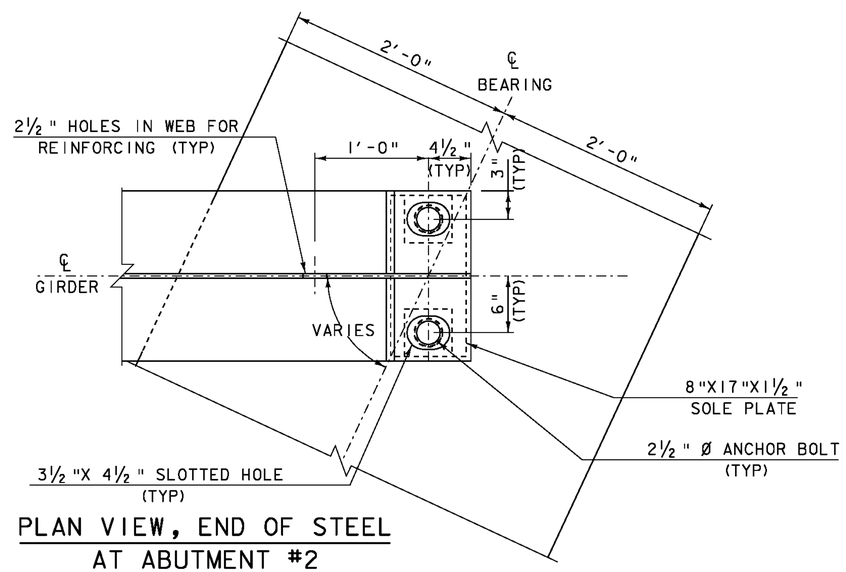

PLAN VIEW, END OF STEEL AT ABUTMENT #2

REVERSE GIRDER FOR ABUTMENT #1
SCALE 1½" = 1'-0

SCALE ¾" = 1'-0

SCALE 1½" = 1'-0

PROJECT NAME: CHESTER	
PROJECT NUMBER: BRF 025-1(37)	
FILE NAME: 95b168\s95b168sub.dgn	PLOT DATE: 21-SEP-2010
PROJECT LEADER: C.P.WILLIAMS	DRAWN BY: D.D.BEARD
DESIGNED BY: R.S.YOUNG	CHECKED BY: R.S.YOUNG
BRIDGE 9 BEARING DETAILS	SHEET 84 OF 124