	ITEM	NO. PIECES	SIZE	LENGTH	MARK	TYPE	A	B	C	D	E	F	G	H	J	K	R	O
	1	BRIDGE NO. 68																
	2	PIER 1																
	3	6	4	599'-0"	E1P401	SP				2'-4"		0'-3"		20'-5"				
	4																	
	5	24	5	4'-0"	E1P501	STR												
△	6	42	5	24'-3"	E1P504	STR												
	7																	
	8	66	5	11'-4"	E1P502	T1	0'-4"	2'-8"	2'-8"	2'-8"	2'-8"		0'-4"					
	9	84	5	8'-4"	E1P503	T1	0'-4"	2'-3"	1'-7"	2'-3"	1'-7"		0'-4"					
	10																	
	11	42	5	7'-5"	E1P505	S9	0'-1½"	2'-8"	1'-7"	2'-8"			0'-1½"	0'-1½"	0'-1½"			
	12																	
	13	8	5	7'-2"	E1P506	17		2'-2"	2'-10"	2'-2"								
	14																	
▲	15	368	5	6'-6"	E1P507	17		2'-9"	1'-0"	2'-9"								
▲	16	14	5	7'-4"	E1P508	17		2'-3"	2'-10"	2'-3"								
	17	8	5	7'-8"	E1P509	17		2'-5"	2'-10"	2'-5"								
	18	14	5	6'-10"	E1P510	17		2'-0"	2'-10"	2'-0"								
	19	324	5	8'-4"	E1P511	17		2'-9"	2'-10"	2'-9"								
▲	20	8	5	5'-10"	E1P512	17		1'-6"	2'-10"	1'-6"								
	21																	
✱	22	73	9	9'-0"	E1P901	STR												
	23	72	9	20'-4"	E1P902	STR												
	24	12	9	18'-11"	E1P903	STR												
	25	12	9	18'-11"	E1P904	STR												
	26	24	9	22'-3"	E1P905	STR												
✱	27	13	9	17'-4"	E1P906	STR												
	28	12	9	28'-9"	E1P908	STR												
	29																	
	30	12	9	24'-6"	E1P907	16	0'-0"	0'-0"	19'-4"					1'-0"		5'-1"		
	31																	
	32	12	9	19'-3"	E1P909	2	2'-0"	17'-3"										
	33																	
	34																	
	35																	
	36	PIER 2																
	37	6	4	565'-0"	E2P401	SP				2'-4"		0'-3"		19'-3"				
	38																	
	39	24	5	4'-0"	E2P501	STR												
△	40	42	5	24'-3"	E2P504	STR												
	41																	
	42	66	5	11'-4"	E2P502	T1	0'-4"	2'-8"	2'-8"	2'-8"	2'-8"		0'-4"					
	43	84	5	8'-4"	E2P503	T1	0'-4"	2'-3"	1'-7"	2'-3"	1'-7"		0'-4"					
	44																	
	45	42	5	7'-5"	E2P505	S9	0'-1½"	2'-8"	1'-7"	2'-8"			0'-1½"	0'-1½"	0'-1½"			
	46																	
	47	8	5	7'-2"	E2P506	17		2'-2"	2'-10"	2'-2"								
▲	48	368	5	6'-6"	E2P507	17		2'-9"	1'-0"	2'-9"								
▲	49	14	5	7'-4"	E2P508	17		2'-3"	2'-10"	2'-3"								
	50	8	5	7'-8"	E2P509	17		2'-5"	2'-10"	2'-5"								
	51	14	5	6'-10"	E2P510	17		2'-0"	2'-10"	2'-0"								
	52	324	5	8'-4"	E2P511	17		2'-9"	2'-10"	2'-9"								
▲	53	8	5	5'-10"	E2P512	17		1'-6"	2'-10"	1'-6"								
	54																	
✱	55	73	9	9'-0"	E2P901	STR												
	56	72	9	20'-4"	E2P902	STR												
	57	12	9	18'-11"	E2P903	STR												
✱	58	13	9	18'-11"	E2P904	STR												
	59	24	9	22'-3"	E2P905	STR												
	60	12	9	17'-4"	E2P906	STR												
	61	12	9	28'-9"	E2P908	STR												
	62																	
	63	12	9	24'-6"	E2P907	16	0'-0"	0'-0"	19'-4"					1'-0"		5'-1"		
	64																	
	65	12	9	19'-3"	E2P909	2	2'-0"	17'-3"										
	66																	
	67																	
	68																	
	69																	
	70	PIER 3																
	71	6	4	645'-0"	E3P401	SP				2'-4"		0'-3"		22'-0"				
	72																	
	73	24	5	4'-0"	E3P501	STR												
△	74	42	5	24'-3"	E3P504	STR												
	75																	
	76	66	5	11'-4"	E3P502	T1	0'-4"	2'-8"	2'-8"	2'-8"	2'-8"		0'-4"					
	77	84	5	8'-4"	E3P503	T1	0'-4"	2'-3"	1'-7"	2'-3"	1'-7"		0'-4"					
	78																	
	79	42	5	7'-5"	E3P505	S9	0'-1½"	2'-8"	1'-7"	2'-8"			0'-1½"	0'-1½"	0'-1½"			
	80																	
	81	8	5	7'-2"	E3P506	17		2'-2"	2'-10"	2'-2"								
▲	82	368	5	6'-6"	E3P507	17		2'-9"	1'-0"	2'-9"								
▲	83	14	5	7'-4"	E3P508	17		2'-3"	2'-10"	2'-3"								
	84	8	5	7'-8"	E3P509	17		2'-5"	2'-10"	2'-5"								
	85	14	5	6'-10"	E3P510	17		2'-0"	2'-10"	2'-0"								
	86	324	5	8'-4"	E3P511	17		2'-9"	2'-10"	2'-9"								
▲	87	8	5	5'-10"	E3P512	17		1'-6"	2'-10"	1'-6"								
	88																	
	89	72	9	9'-0"	E3P901	STR												
✱	90	73	9	20'-4"	E3P902	STR												
	91	12	9	18'-11"	E3P903	STR												
	92	12	9	18'-11"	E3P904	STR												
	93	24	9	22'-3"	E3P905	STR												
✱	94	13	9	17'-4"	E3P906	STR												
	95	12	9	28'-9"	E3P908	STR												
	96																	
	97	12	9	24'-6"	E3P907	16	0'-0"	0'-0"	19'-4"					1'-0"		5'-1"		
	98																	
	99	12	9	19'-3"	E3P909	2	2'-0"	17'-3"										

	ITEM	NO. PIECES	SIZE	LENGTH	MARK	TYPE	A	B	C	D	E	F	G	H	J	K	R	O
	100	BRIDGE NO. 68																
	101																	
	102																	
	103																	
	104																	
	105	NEW JOINTS AT PIERS																
▲✱	106	49	5	38'-3"	ES501	STR												
	107																	
	108																	
	109	MEDIAN REPLACEMENT																
△	110	171	4	31'-0"	EM403	STR												
	111																	
	112	622	4	1'-7"	EM401	19		0'-8"	0'-11"	0'-0"								
	113																	
	114	622	4	3'-5"	EM402	16	0'-11"	0'-11"	0'-11"	0'-8"								
	115																	
	116	360	4	3'-9"	EM404	17		1'-7"	2'-2"	0'-0"								
	117																	
	118																	
	119																	
	120	SIDEWALK																
	121																	
	122	72	5	30'-6"	ESW501	STR												
▲✱	123	125	5	26'-0"	ESW502	STR												
	124																	
	125																	
	126	1155	5	1'-8"	ESW504	19		0'-8"	1'-0"	0'-0"				0'-5"		0'-5"		
	127																	
	128																	
	129	112	5	3'-6"	ESW505	17		0'-0"	2'-6"	1'-0"								
	130																	
▲✱	131	802	5	9'-10"	ESW503	S6	0'-6"	1'-0"	7'-0"	0'-10"			0'-6"					
	132																	
	133																	
	134																	
	135																	
	136																	
	137																	
	138																	
	139																	
	140																	
	141																	
	142																	
	143																	
	144																	
	145																	
	146																	
	147																	
	148																	
	149																	
	150																	
	151																	
	152																	
	153																	
	154																	
	155																	
	156																	
	157																	
	158																	
	159																	
	160																	
	161																	
	162																	
	163																	
	164																	
	165																	
	166																	
	167																	
	168																	
	169																	
	170																	
	171																	
	172																	
	173																	
	174																	
	175																	
	176																	
	177																	
	178																	
	179																	
	180																	
	181																	
	182																	
	183																	
	184																	
	185																	
	186																	
	187																	
	188																	
	189																	
	190																	
	191																	
	192																	
	193																	
	194																	
	195																	
	196																	
	197																	
	198																	

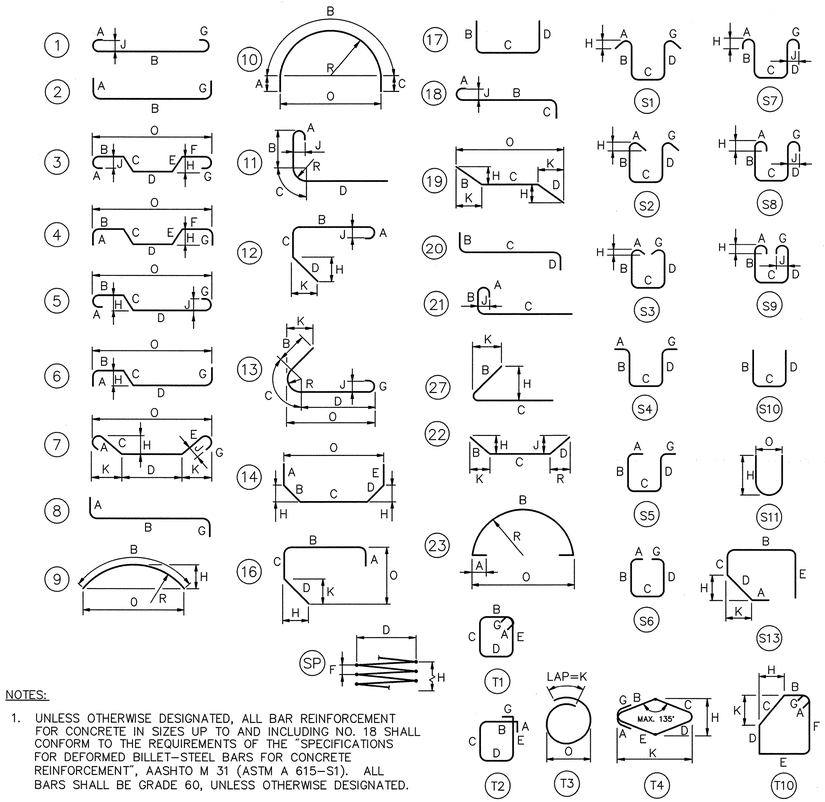

NOTES:

1. UNLESS OTHERWISE DESIGNATED, ALL BAR REINFORCEMENT FOR CONCRETE IN SIZES UP TO AND INCLUDING NO. 18 SHALL CONFORM TO THE REQUIREMENTS OF THE "SPECIFICATIONS FOR DEFORMED BILLET-STEEL BARS FOR CONCRETE REINFORCEMENT", AASHTO M 31 (ASTM A 615-S1). ALL BARS SHALL BE GRADE 60, UNLESS OTHERWISE DESIGNATED.
2. FOR TYPICAL BENDING DETAILS, RECOMMENDED PIN DIAMETER "D" OF BENDS AND HOOKS, AND OTHER STANDARD PRACTICE, SEE CURRENT CONCRETE REINFORCING STEEL INSTITUTE "MANUAL OF STANDARD PRACTICE".
3. BARS WHICH REQUIRE MORE ACCURATE BENDING THAN STANDARD PRACTICES SHOULD HAVE LIMITS INDICATED.
4. ALL DIMENSIONS ARE OUT TO OUT OF BAR EXCEPT "A" AND "G" ON STANDARD 180° AND 135° HOOKS.
5. "J" DIMENSION ON 180° HOOKS TO BE SHOWN ONLY WHERE NECESSARY TO RESTRICT HOOK SIZE. OTHERWISE, STANDARD HOOKS ARE TO BE USED.
6. "H" DIMENSION ON STIRRUPS TO BE SHOWN ONLY WHEN NECESSARY TO MAINTAIN CLEARANCES.
7. "E" IN PREFIX DENOTES EPOXY COATED REINFORCING STEEL.
8. WHERE SLOPE DIFFERS FROM 45 DEGREES, DIMENSIONS "H" AND "K" MUST BE SHOWN.
9. ✱ DENOTES ONE EXTRA BAR ADDED FOR TESTING PURPOSES.
10. △ DENOTES TWO EXTRA BARS ADDED FOR TESTING PURPOSES.
11. ▲ DENOTES BARS TO BE CUT TO FIT IN FIELD.

ASTM STANDARD REINFORCING BARS

BAR SIZE DESIG-NATION	WEIGHT POUNDS PER FOOT	NOMINAL DIMENSIONS ROUND SECTION		
		DIAMETER INCHES	CROSS SEC-TIONAL AREA SQ. INCHES	PERIMETER INCHES
#3	0.376	0.375	0.11	1.178
#4	0.668	0.500	0.20	1.571
#5	1.043	0.625	0.31	1.963
#6	1.502	0.750	0.44	2.356
#7	2.044	0.875	0.60	2.749
#8	2.670	1.000	0.79	3.142
#9	3.400	1.128	1.00	3.544
#10	4.303	1.270	1.27	3.990
#11	5.313	1.410	1.56	4.430
#14	7.650	1.693	2.25	5.320
#18	13.60	2.257	4.00	7.090

STATE OF VERMONT
AGENCY OF TRANSPORTATION

Town Of SOUTH BURLINGTON	Bridge No. 68
	Log Sta.
Highway No. U.S. 2	Surv. Sta.
U.S. 2 OVER I-89	
REINFORCING STEEL SCHEDULE	
Designed By A. SETAS	Drawn By B.J. MASSE
Checked By T.S. BRYANT Date 1/00	Bridge Design Supervisor C.D. BAKER Date 1/00
PROJECT SOUTH BURLINGTON	PROJECT NO. IM DECK(36)
VHB Cad Drawing No. 50929REF	Date 1/00
Bridge Sheet No.	Sheet 43 of 75

VANASSE HANGEN BRUSTLIN, INC.