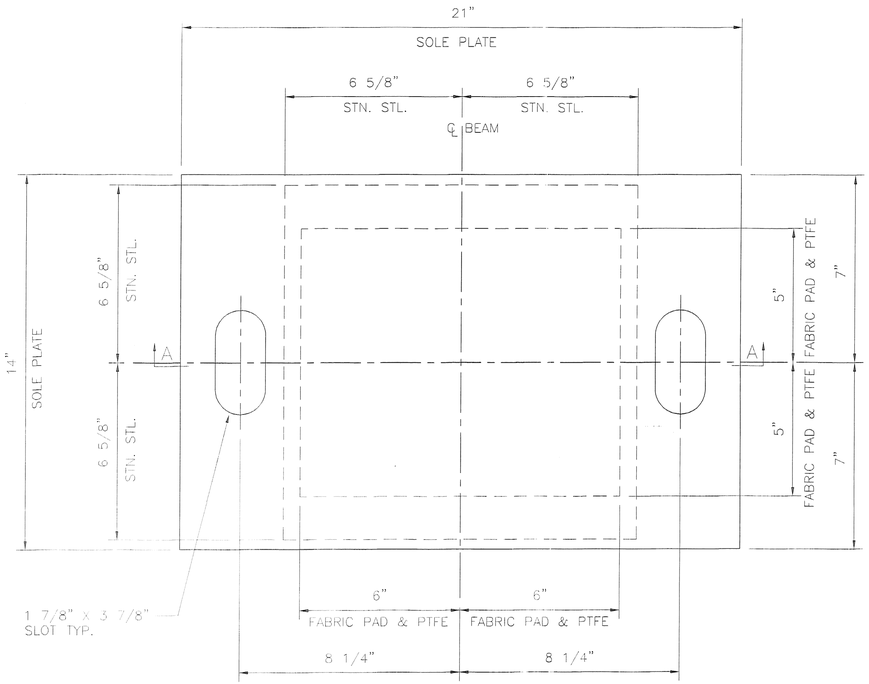

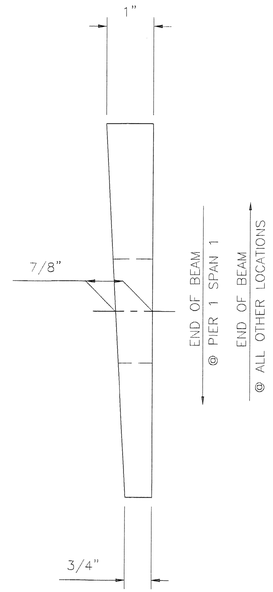

ELEVATION
SOLE PLATE ONLY

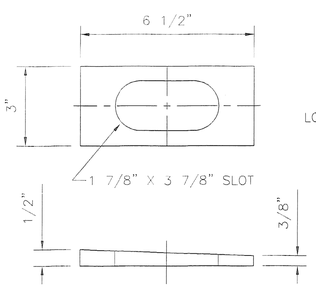

PLAN

EXPANSION BEARING
LOCATION: PIER 1 SPAN 1 & 2, PIER 2 SPAN 3, PIER 3 SPAN 4, @ BEAM LINES 1 THRU14
QUANTITY: 56

Beveled Plate Washer not required at Pier 1, Span No. 2

BEVELED PLATE WASHER
ASTM A709 GR.36 GALVANIZED

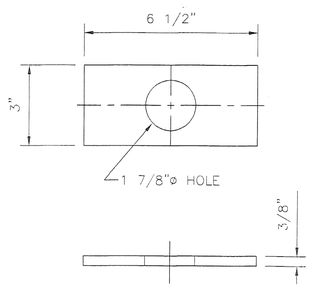

FLAT PLATE WASHER
ASTM A709 GR.36 GALVANIZED

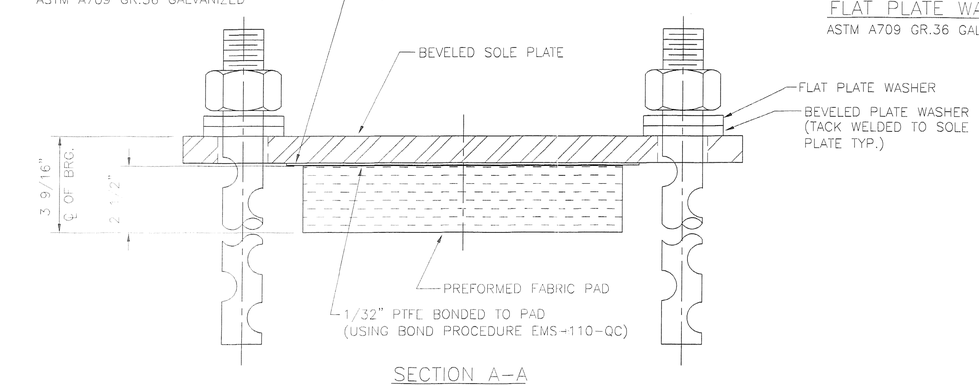

SECTION A-A

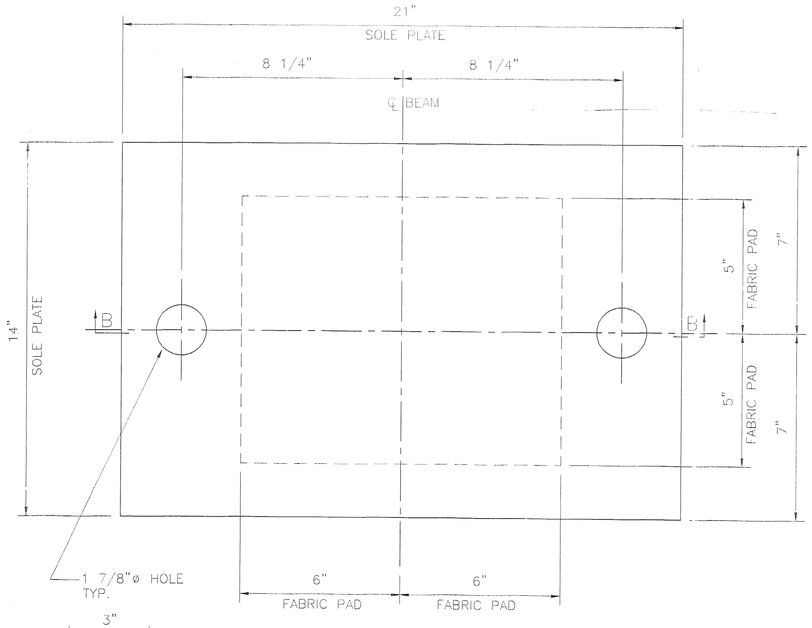

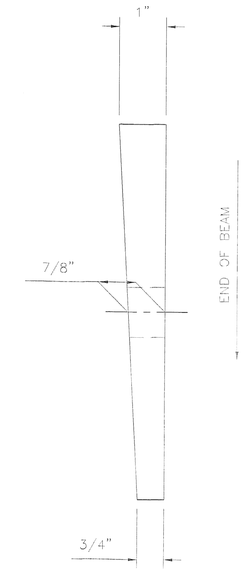

ELEVATION
SOLE PLATE ONLY

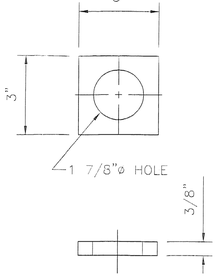

PLAN

FIXED BEARING
LOCATION: PIER 2 SPAN 2, PIER 3 SPAN 3, @ BEAM LINES 1 THRU14
QUANTITY: 28

FLAT PLATE WASHER
ASTM A709 GR.36 GALVANIZED

SHOP DRAWING REVIEW

☐ REVIEWED AS REQUIRED BY THE CONSTRUCTION CONTRACT DOCUMENTS AND APPROVED, BUT ONLY FOR CONFORMANCE TO THE DESIGN CONCEPT OF THE WORK, AND SUBJECT TO FURTHER LIMITATIONS AND REQUIREMENTS OF THE CONTRACT DOCUMENTS.
☐ REJECTED — REVISE AND RESUBMIT — FURNISH AS CORRECTED
CORRECTIONS OF OTHERS ... THIS REVIEW DO NOT RELIEVE CONTRACTOR ... DRAWINGS AND SPECIFICATIONS ... DESIGN CONCEPT OF THE WORK ... IN ACCORDANCE WITH THE IN THE CONTRACT DOCUMENTS. THE CONTRACTOR IS RESPONSIBLE FOR CORRELATING ALL SHOP DRAWINGS AND DIMENSIONS, SELECTING FABRICATION PROCESSES AND TECHNIQUES OF CONSTRUCTION, COORDINATING THE WORK WITH THE WORK OF ALL OTHER TRADES, AND PERFORMING THE WORK IN A SAFE AND SATISFACTORY MANNER.
VHB Vanasse Hangen Brustlin, Inc. Engineers, Planners, and Scientists 54 Boston Post Road, Wilton Rd. Bedford, NH 03110 603-644-0888
Job Number: 50939
Reviewed By: ASB
Date: 6-19-00

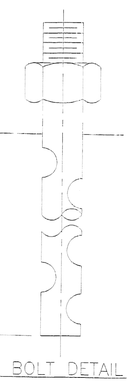

ANCHOR BOLT DETAIL

1 1/2" DIA. X 22" LONG ASTM A709 GR 36 SWEDGED ANCHOR BOLT WITH ONE END THREADED 4" W/ONE HEAVY HEX NUT ALL GALVANIZED

NUTS SHALL BE PLACED FINGER TIGHT AND ANCHOR BOLT THREADS BURRED TO PREVENT REMOVAL OF NUT.

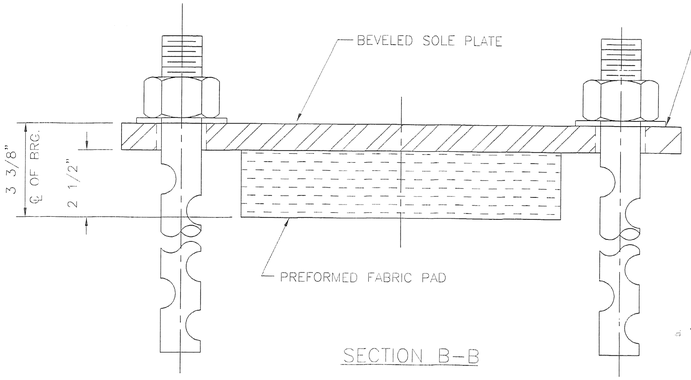

SECTION B-B

STATE OF VERMONT
AGENCY OF TRANSPORTATION

U.S. 2 OVER I-89
TOWN OF SOUTH BURLINGTON
PROJECT NO. IM DECK (36)

ITEM NO. 531.10
BRIDGE NO.68

COSMEC, INC.
70 SOUTH STREET
WALPOLE, MA. 02081

SCALE:	DRAWN BY:	CHECKED BY:
3/8"=1"	R.F.C.	M.C.M.
	DATE: 5/30/00	DATE: 6/5/00

COSMEC PREFORMED FABRIC PAD BEARINGS

REV.		BY	DATE	CK'D	DATE

CUSTOMER	S.C. NUMBER	DRAWING NUMBER	REV.
J.A. McDonald INC.	59077	3342	