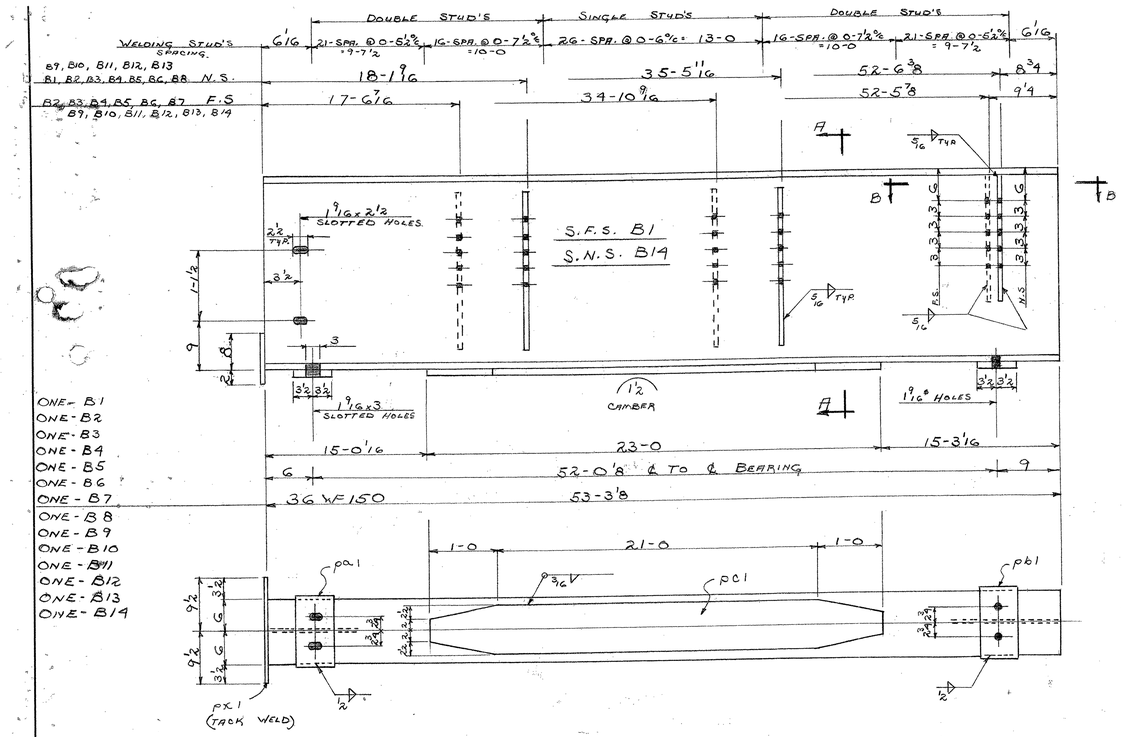

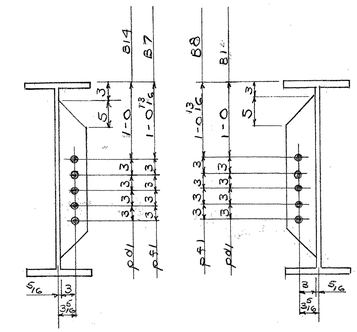

FOR B7 & B14 FOR B1 & B8

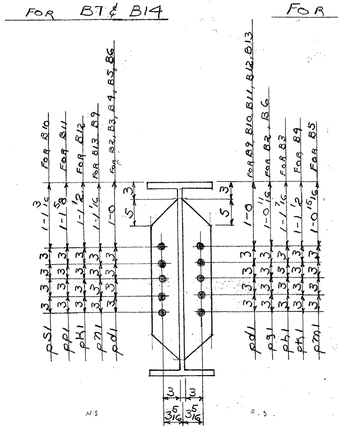

FOR B2, B3, B4, B5, B6, B9 B10, B11, B12, B13

SECTION A-A

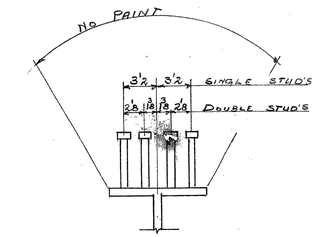

TYPICAL WELDING STUD DETAIL

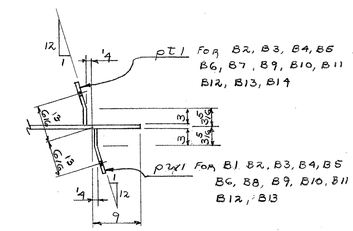

SECTION B-B

BILL OF MATERIAL

NO. PIECES	MARK	DESCRIPTION	LENGTH FT.	LENGTH IN.		WEIGHT
		~ BEAMS ~				
14	B1 THRU B14	36 WF 150	53	3 1/8	@ 53-3 1/8 ORD: B46830	
14	ps1	SOLE PL 7 x 1	1	1	RES. @ 20-0 1-EA. BM. RES. @ 20-0	
14	pb1	do.	1	1	1-EA. BM. ORD. B46831	
14	pc1	PL 9 x 5/16	23	0	1-EA. BM. 2-EA. B1, B2, B3, B4, B5	
24	pd1	BAR 5 x 1/2	2	6	B6, B7, B8, B11, B12, B13, B14 RES. @ 20-0	
4	pf1	do.	2	6	2-EA. B7, B8 do.	
4	pg1	do.	2	6	2-EA. B2, B6 do.	
2	ph1	do.	2	6	2-EA. B3 do.	
4	pk1	do.	2	6	2-EA. B4, B12 do.	
2	pm1	do.	2	6	2-EA. B5 do.	
4	pn1	do.	2	6	2-EA. B9, B13 do.	
2	pp1	do.	2	6	2-EA. B11 do.	
2	ps1	do.	2	6	2-EA. B10	
12	pt1	BENT. 8 x 1/2	2	0	1-EA. B2, B3, B4, B5 B6, B7, B9, B10, B11 B12, B13, B14 RES. @ 20-0	
12	pw1	do.	2	0	1-EA. B1, B2, B3, B4 B5, B6, B8, B9, B10, B11 B12, B13 RES. @ 20-0	
14	px1	PL 10 x 1/4	1	7	1-EA. BM.	
		1/2 FILLET WELD	32	9		
		5/16 FILLET WELD	360	0		
		3/16 FILLET WELD	653	9		
		1/2 OF 1/16 PAINT				
		CONT. 61-382-1			WELDING STUDS	
4956		3/4" WELDING STUDS	0	6 1/2		

REV. PER. APP. 7-11-61 HP

VERMONT STRUCTURAL STEEL CORPORATION
BURLINGTON, VT.

		DATE
DRAWN BY	HP	6-20-61
CK'D BY	K.T.	6-22-61
HOLES	15/16 & 13/16 AS NOTED	
RIVETS		
PAINT	R.L. (VT. SPEC.)	

PROJECT INTERSTATE BRIDGE I 89-3 (12)
LOCATION WILLISTON RD. INTERCHANGE
CUSTOMER E.T. O'NEILL & SON CONST. CORP.
ARCHITECT STATE OF VT. DEPT. OF HIGHWAYS
JOB NO. 61-382 STR. SHEET NO. 1
61-382-1 WELDING STUDS

PRINT RECORD NO.	FOR	DATE
3	APP.	6-26
3	APP	7-13
3 (1)	SUBP	7-14

SOUTH BURLINGTON IM DECK(36)
FOR REFERENCE ONLY - BRIDGE 68

SHEET 68C OF 75

APPROVED BY ARCHITECT 7-24-61