ITEM	NO. PIECES	SIZE	LENGTH	MARK	TYPE	A	B	C	D	E	F	G	H	J	K	R	O
1	BRIDGE NO. 68																
2	DECK REINFORCEMENT PHASE 1																
3	82	5	27'-10"	1ES501	STR												
4	164	5	37'-10"	1ES502	STR												
5	82	5	30'-4"	1ES503	STR												
6	1024	5	16'-1"	1ES504	STR												
△ 7	14	5	16'-0"	1ES505	STR												
8																	
9	90	5	4'-0"	1ES506	S5	1'-8"	8"	1'-0"	8"								
10																	
11																	
12																	
13																	
14	DECK REINFORCEMENT PHASE 2																
15	166	5	27'-10"	2ES501	STR												
16	332	5	37'-10"	2ES502	STR												
17	166	5	30'-4"	2ES503	STR												
18	1024	5	30'-1"	2ES504	STR												
19	12	5	29'-1"	2ES505	STR												
20																	
21	162	5	4'-0"	2ES506	S5	1'-8"	8"	1'-0"	8"								
22	261	5	11'-6"	2ES507	S5	10"	1'-7"	6'-11"	1'-4"			10"					
23	360	5	6'-4"	2ES508	S5	10"	1'-7"	1'-6"	1'-7"			10"					
24																	
25																	
26																	
27																	
28																	
29	DECK REINFORCEMENT PHASE 3																
30	82	5	27'-10"	3ES501	STR												
31	164	5	37'-10"	3ES502	STR												
32	82	5	30'-4"	3ES503	STR												
33	1024	5	16'-1"	3ES504	STR												
△ 34	14	5	16'-0"	3ES505	STR												
35																	
36	90	5	4'-0"	3ES506	S5	1-8"	8"	1'-0"	8"								
37																	
38																	
39																	
40																	
41																	
42	DECK REINFORCEMENT PHASE 4																
43	166	5	27'-10"	4ES501	STR												
44	332	5	37'-10"	4ES502	STR												
45	166	5	30'-4"	4ES503	STR												
46	1024	5	30'-1"	4ES504	STR												
△ 47	14	5	29'-1"	4ES505	STR												
48																	
49	162	5	4'-0"	4ES506	S5	1'-8"	8"	1'-0"	8"								
50	261	5	11'-6"	4ES507	S5	10"	1'-7"	6'-11"	1'-4"			10"					
51	360	5	6'-4"	4ES508	S5	10"	1'-7"	1'-6"	1'-7"			10"					
52																	
53																	
54																	
55																	
56	DECK REINFORCEMENT PHASE 5 (2 CURBS)																
57	16	5	27'-10"	5ES501	STR												
58	32	5	37'-10"	5ES502	STR												
59	16	5	30'-4"	5ES503	STR												
60																	
61	530	5	2'-3"	5ES504	S5		9"	9"	9"								
62																	
63																	
64																	
65																	
66																	
67																	
68																	
69																	
70																	
71																	
72																	
73																	
74																	
75																	
76																	
77																	
78																	
79																	
80																	
81																	
82																	
83																	
84																	
85																	
86																	
87																	
88																	
89																	
90																	
91																	
92																	
93																	
94																	
95																	
96																	
97																	
98																	
99																	

ITEM	NO. PIECES	SIZE	LENGTH	MARK	TYPE	A	B	C	D	E	F	G	H	J	K	R	O
100	BRIDGE NO. 68																
101																	
102																	
103																	
104																	
105																	
106																	
107																	
108																	
109																	
110																	
111																	
112																	
113																	
114																	
115																	
116																	
117																	
118																	
119																	
120																	
121																	
122																	
123																	
124																	
125																	
126																	
127																	
128																	
129																	
130																	
131																	
132																	
133																	
134																	
135																	
136																	
137																	
138																	
139																	
140																	
141																	
142																	
143																	
144																	
145																	
146																	
147																	
148																	
149																	
150																	
151																	
152																	
153																	
154																	
155																	
156																	
157																	
158																	
159																	
160																	
161																	
162																	
163																	
164																	
165																	
166																	
167																	
168																	
169																	
170																	
171																	
172																	
173																	
174																	
175																	
176																	
177																	
178																	
179																	
180																	
181																	
182																	
183																	
184																	
185																	
186																	
187																	
188																	
189																	
190																	
191																	
192																	
193																	
194																	
195																	
196																	
197																	
198																	

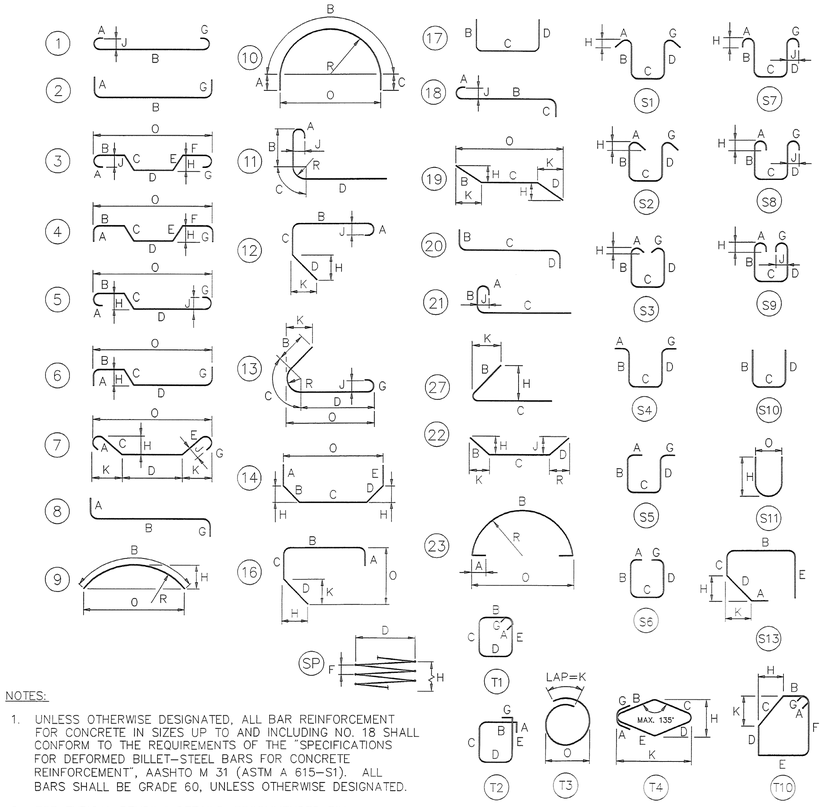

NOTES:

1. UNLESS OTHERWISE DESIGNATED, ALL BAR REINFORCEMENT FOR CONCRETE IN SIZES UP TO AND INCLUDING NO. 18 SHALL CONFORM TO THE REQUIREMENTS OF THE "SPECIFICATIONS FOR DEFORMED BILLET-STEEL BARS FOR CONCRETE REINFORCEMENT", AASHTO M 31 (ASTM A 615-S1). ALL BARS SHALL BE GRADE 60, UNLESS OTHERWISE DESIGNATED.
2. FOR TYPICAL BENDING DETAILS, RECOMMENDED PIN DIAMETER "D" OF BENDS AND HOOKS, AND OTHER STANDARD PRACTICE, SEE CURRENT CONCRETE REINFORCING STEEL INSTITUTE "MANUAL OF STANDARD PRACTICE".
3. BARS WHICH REQUIRE MORE ACCURATE BENDING THAN STANDARD PRACTICES SHOULD HAVE LIMITS INDICATED.
4. ALL DIMENSIONS ARE OUT TO OUT OF BAR EXCEPT "A" AND "G" ON STANDARD 180° AND 135° HOOKS.
5. "J" DIMENSION ON 180° HOOKS TO BE SHOWN ONLY WHERE NECESSARY TO RESTRICT HOOK SIZE. OTHERWISE, STANDARD HOOKS ARE TO BE USED.
6. "H" DIMENSION ON STIRRUPS TO BE SHOWN ONLY WHEN NECESSARY TO MAINTAIN CLEARANCES.
7. "E" IN PREFIX DENOTES EPOXY COATED REINFORCING STEEL.
8. WHERE SLOPE DIFFERS FROM 45 DEGREES, DIMENSIONS "H" AND "K" MUST BE SHOWN.
9. ✳ DENOTES ONE EXTRA BAR ADDED FOR TESTING PURPOSES.
10. △ DENOTES TWO EXTRA BARS ADDED FOR TESTING PURPOSES.
11. ▲ DENOTES BARS TO BE CUT TO FIT IN FIELD.

ASTM STANDARD REINFORCING BARS

BAR SIZE DESIG-NATION	WEIGHT POUNDS PER FOOT	NOMINAL DIMENSIONS ROUND SECTION		
		DIAMETER INCHES	CROSS SEC-TIONAL AREA SQ. INCHES	PERIMETER INCHES
#3	0.376	0.375	0.11	1.178
#4	0.668	0.500	0.20	1.571
#5	1.043	0.625	0.31	1.963
#6	1.502	0.750	0.44	2.356
#7	2.044	0.875	0.60	2.749
#8	2.670	1.000	0.79	3.142
#9	3.400	1.128	1.00	3.544
#10	4.303	1.270	1.27	3.990
#11	5.313	1.410	1.56	4.430
#14	7.650	1.693	2.25	5.320
#18	13.60	2.257	4.00	7.090

SHEETS 11A, 11B AND 11C SHOW DECK REPLACEMENT REINFORCING. REFER TO OTHER CONTRACT SHEETS FOR ADDITONAL INFORMATION. CONFLICTS BETWEEN THESE DRAWINGS AND OTHER CONTRACT DRAWINGS SHALL BE BROUGHT TO THE ATTENTION OF THE RESIDENT ENGINEER.

STATE OF VERMONT
AGENCY OF TRANSPORTATION

Town Of SOUTH BURLINGTON	Bridge No. 68
	Log Sta.
Highway No. U.S. 2	Surv. Sta.
U.S. 2 OVER I-89	
REINFORCING STEEL SCHEDULE	
Designed By A. ROBINSON	Drawn By K. WENTWORTH
Checked By S. JOHNSON Date 5/9/01	Bridge Design Supervisor S. JOHNSON Date 5/9/01
PROJECT SOUTH BURLINGTON	PROJECT NO. IM DECK(36)
VHB Cad Drawing No. 50929REF	Date 5/9/01
Bridge Sheet No.	Sheet 11C of 73

VANASSE HANGEN BRUSTLIN, INC.