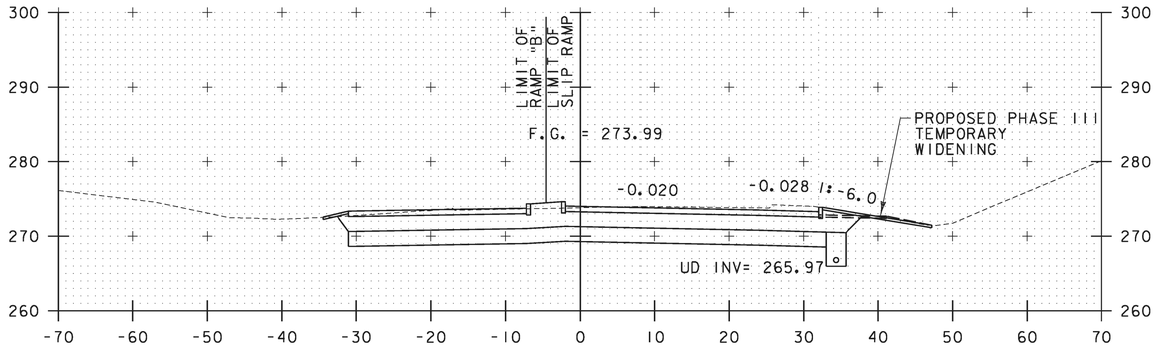

80+75

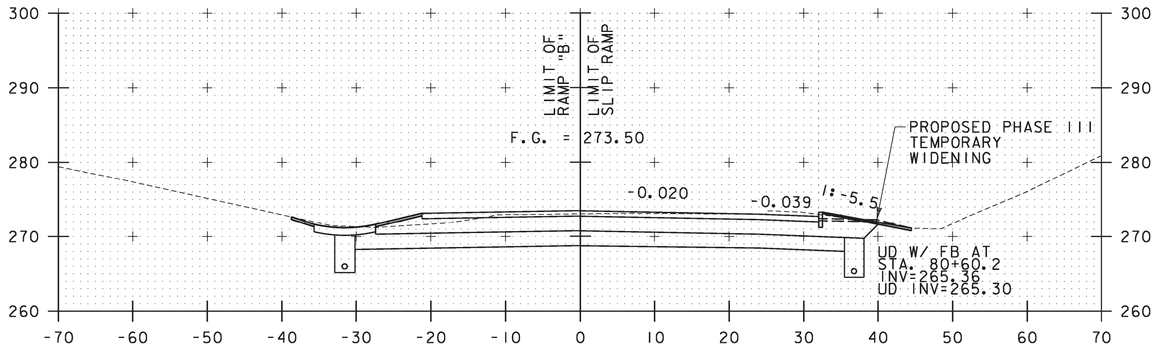

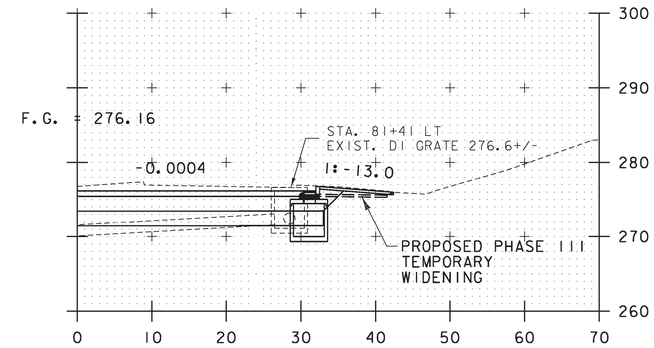

80+50

81+40.90 CB

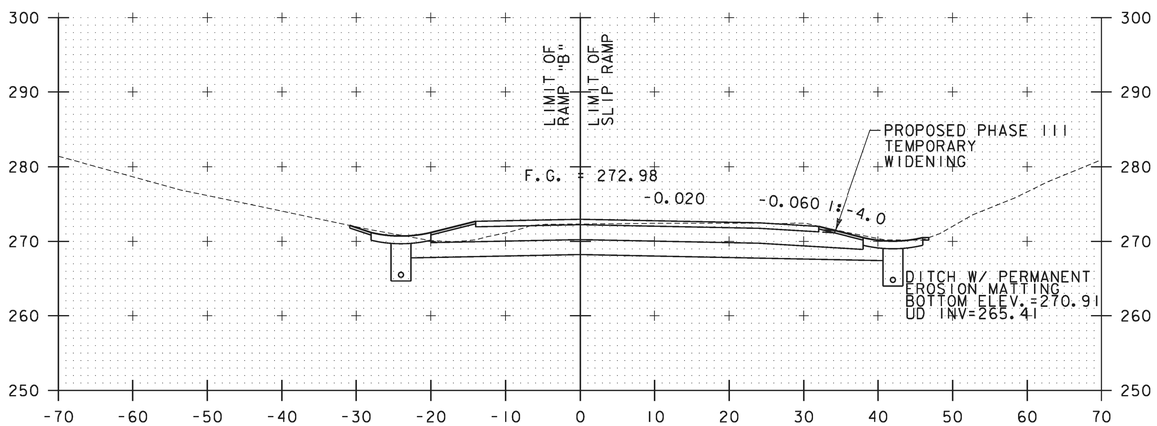

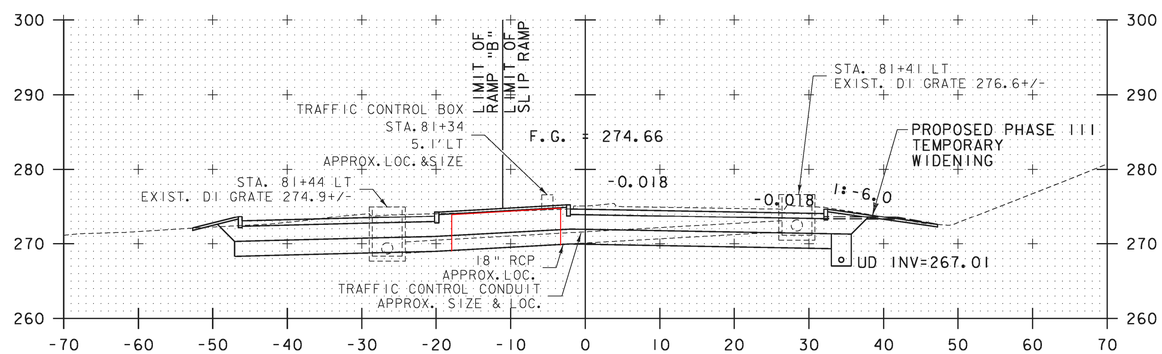

SLIP RAMP POT STA. 80+00.00=
RAMP "B" POT STA. 58+21.82

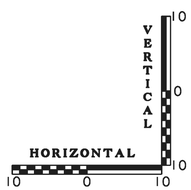

81+00

PROJECT NAME: WINOOSKI	
PROJECT NUMBER: NH 089-3(65)	
FILE NAME: z94a198xsl.dgn	PLOT DATE: 2/22/2010
PROJECT LEADER: KEN UPMAL	DRAWN BY: T.BIGELOW
DESIGNED BY: T.BIGELOW	CHECKED BY: E.ATKINS
SLIP RAMP CROSS SECTIONS SHEET 1	SHEET 65 OF 67