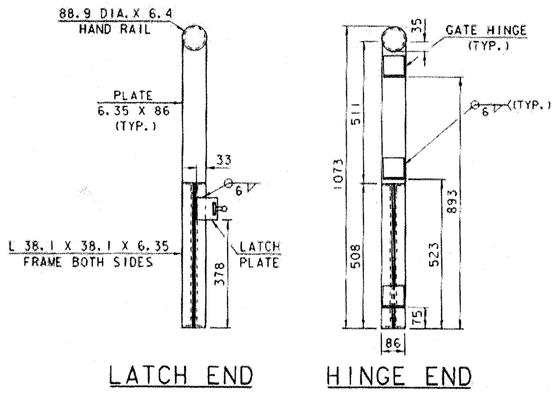

GATE END DETAILS

SCALE = 1:10

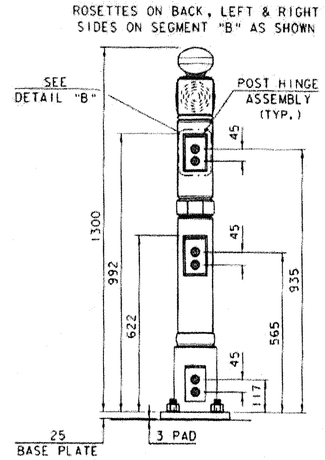

GATE HINGE POST

SCALE = 1:10

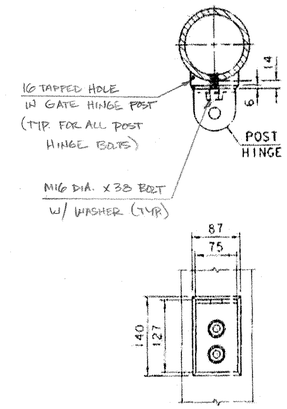

DETAIL "B"

SCALE = 1:5

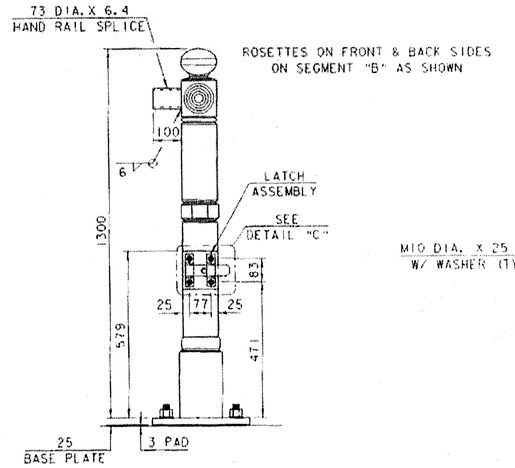

GATE LATCH POST

SCALE = 1:10

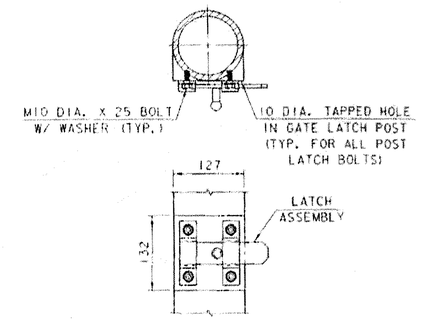

DETAIL "C"

SCALE = 1:5

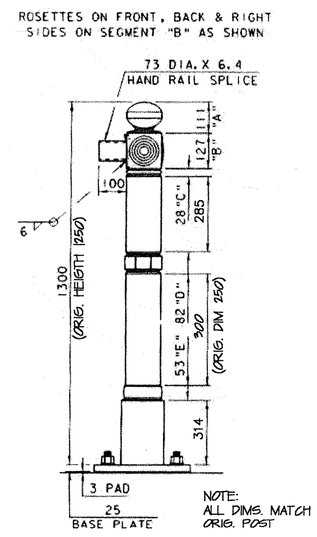

END POST

SCALE = 1:10

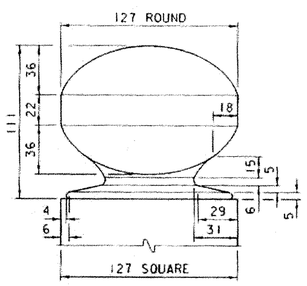

SEGMENT "A"

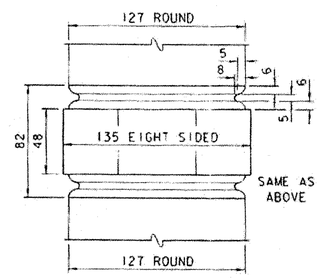

SEGMENT "D"

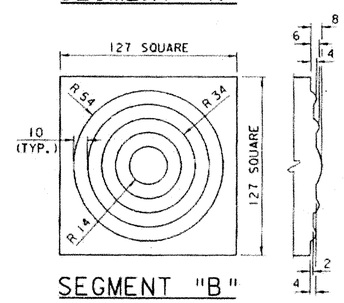

SEGMENT "B"

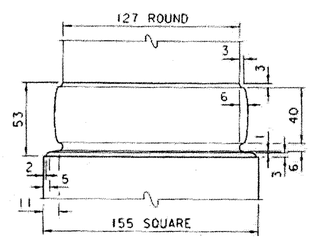

SEGMENT "E"

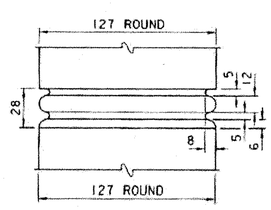

SEGMENT "C"

POST SEGMENT DETAILS

SCALE = 1:2

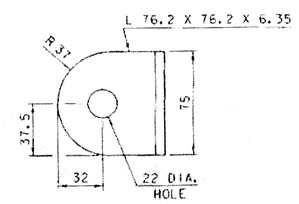

GATE HINGE DETAIL

SCALE = 1:2

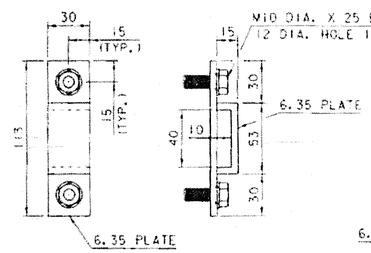

LATCH BRACKET

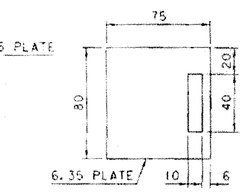

LATCH PLATE

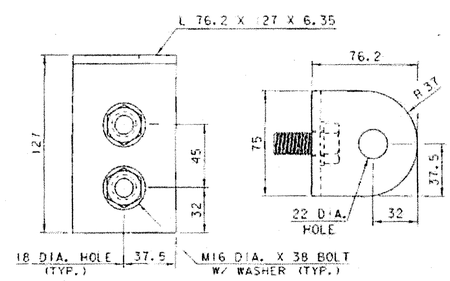

POST HINGE DETAILS

SCALE = 1:2

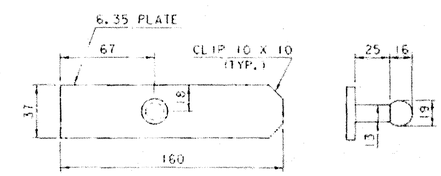

LATCH SLIDE

LATCH ASSEMBLY DETAILS

SCALE = 1:2

REVISIONS	REMARKS

ONE PRUYN'S ISLAND DR.
GLENS FALLS, N.Y. 12801

RIVERSIDE FAB, INC.

PHONE # 1(518) 798-3533
FAX # 1(518) 798-1711

DATE	8/28/03	PROJECT	PROPOSED IMPROVMENT BRIDGE PROJECT
DRAWN BY	CCE	LOCATION	BRATTLEBORO, VT.
CHK'D BY		CUSTOMER	RENAUD BROTHERS, INC.
HOLES		ARCHITECT	STATE OF VERMONT, AGENCY OF TRANSPORTATION
BOLTS		JOB NO.	RFC 589
PAINT		SHEET NAME	POST & GATE DETAILS
SCALE	AS NOTED		

PRINT RECORD

DATE	NO.	
		081

DRAWING NUMBER **F2**

RECEIVED
CK'D BY G. Roy OK'D BY AS NOTED
9.8.03
SEP 08 2003
RESUBMIT ____ APPROVED ____
BY RRW DATE 9-9-03