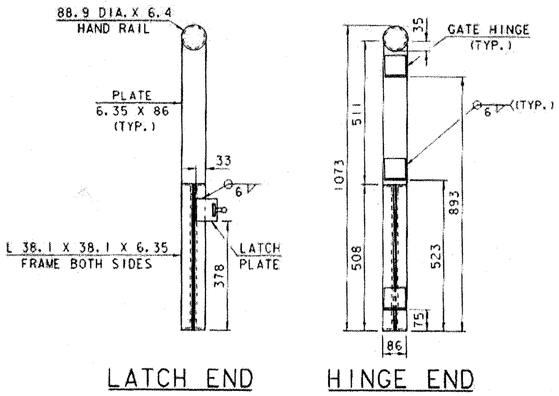

GATE END DETAILS

0 0.5 1

SCALE = 1:10

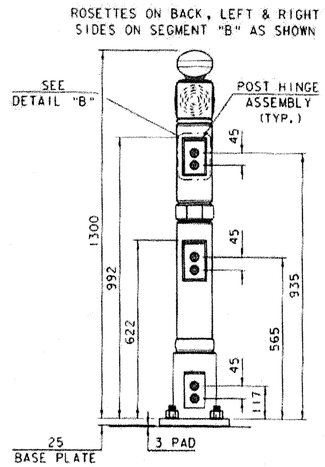

GATE HINGE POST

0 0.5 1

SCALE = 1:10

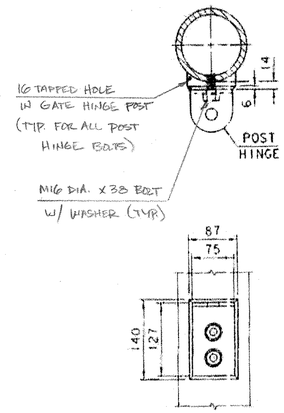

DETAIL "B"

0 0.25 0.5

SCALE = 1:5

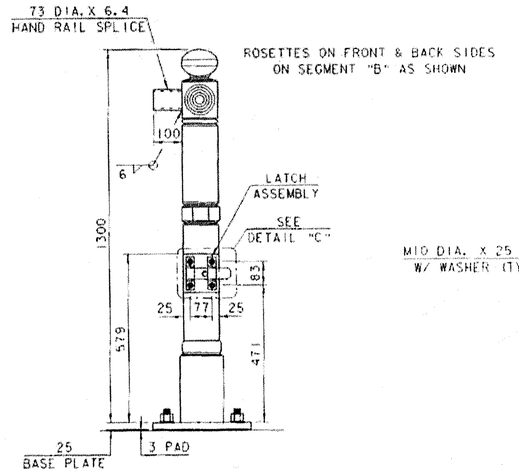

GATE LATCH POST

0 0.5 1

SCALE = 1:10

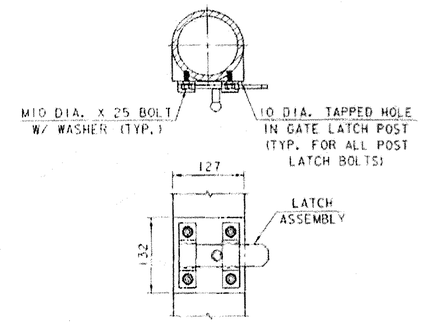

DETAIL "C"

0 0.25 0.5

SCALE = 1:5

ROSETTES ON FRONT, BACK & RIGHT
SIDES ON SEGMENT "B" AS SHOWN

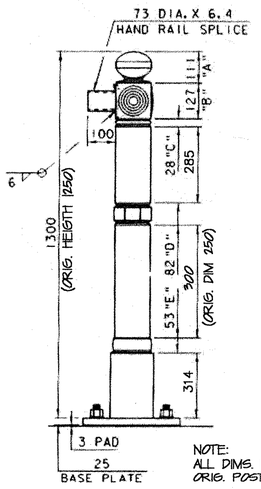

NOTE:
ALL DIMS. MATCH
ORIG. POST

END POST

0 0.5 1

SCALE = 1:10

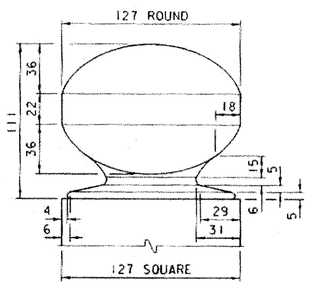

SEGMENT "A"

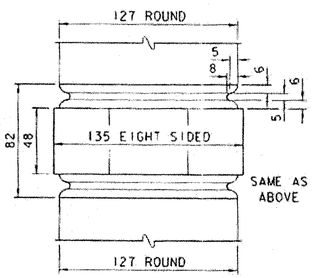

SEGMENT "D"

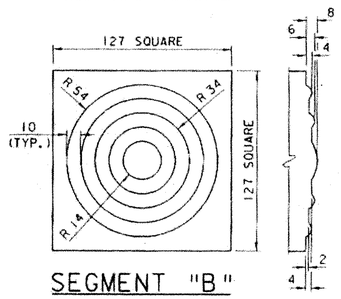

SEGMENT "B"

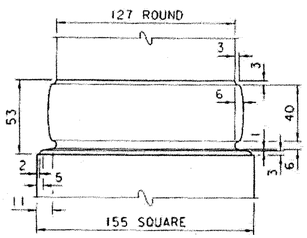

SEGMENT "E"

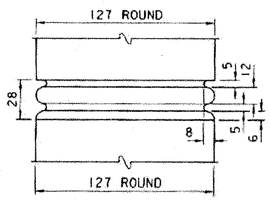

SEGMENT "C"

POST SEGMENT DETAILS

0 0.1 0.2

SCALE = 1:2

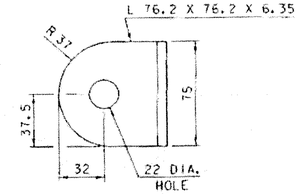

GATE HINGE DETAIL

0 0.1 0.2

SCALE = 1:2

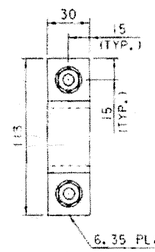

LATCH BRACKET

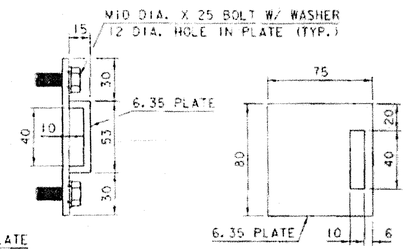

LATCH PLATE

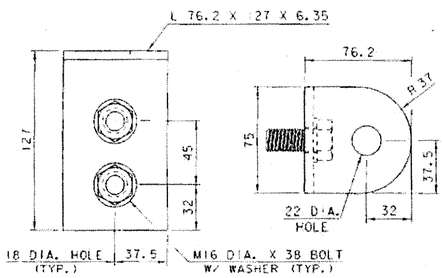

POST HINGE DETAILS

0 0.1 0.2

SCALE = 1:2

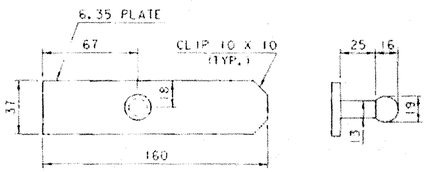

LATCH SLIDE

LATCH ASSEMBLY DETAILS

0 0.1 0.2

SCALE = 1:2

RECEIVED
CK'D BY G.Roy OK'D BY AS NOTED
9.8.03
SEP 08 2003
RESUBMIT ____ APPROVED ____
BY Rlw DATE 9.9.03

REVISIONS	REMARKS

ONE PRUYN'S ISLAND DR.
GLENS FALLS, N.Y. 12801

RIVERSIDE FAB, INC.

PHONE # 1(518) 798-3533
FAX # 1(518) 798-1711

DATE	8/28/03	PROJECT	PROPOSED IMPROVMENT BRIDGE PROJECT
DRAWN BY	CCE	LOCATION	BRATTLEBORO, VT.
CHK'D BY		CUSTOMER	RENAUD BROTHERS, INC.
HOLES		ARCHITECT	STATE OF VERMONT, AGENCY OF TRANSPORTATION
BOLTS		JOB NO.	RFC 589
PAINT		SHEET NAME	POST & GATE DETAILS
SCALE	AS NOTED		

PRINT RECORD

DATE	NO.	
		081

DRAWING NUMBER **F2**