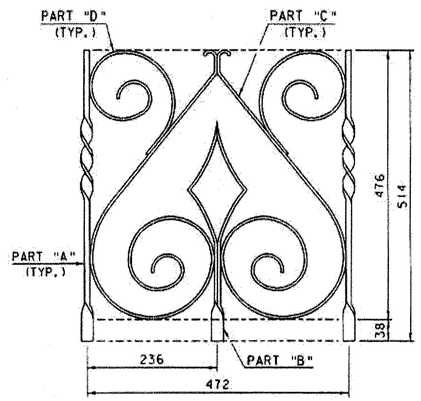

PANEL "A"

0 0.25 0.5

SCALE = 1:5

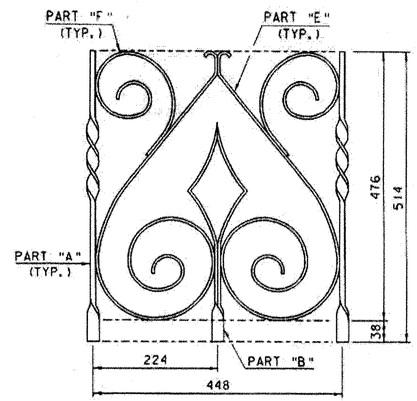

PANEL "B"

0 0.25 0.5

SCALE = 1:5

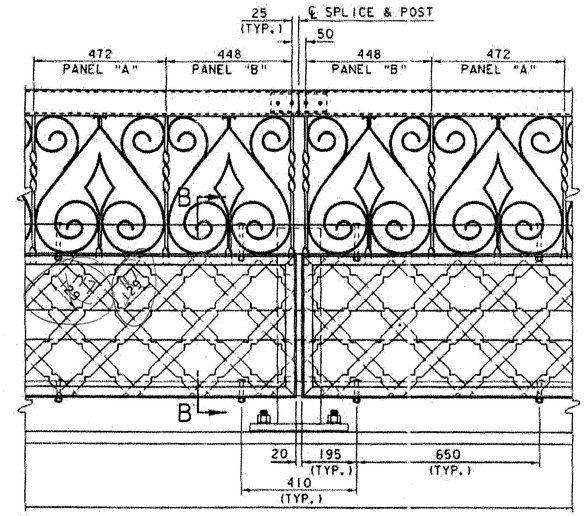

ORNAMENTAL RAIL SPLICE ELEVATION

0 0.5 1

SCALE = 1:10

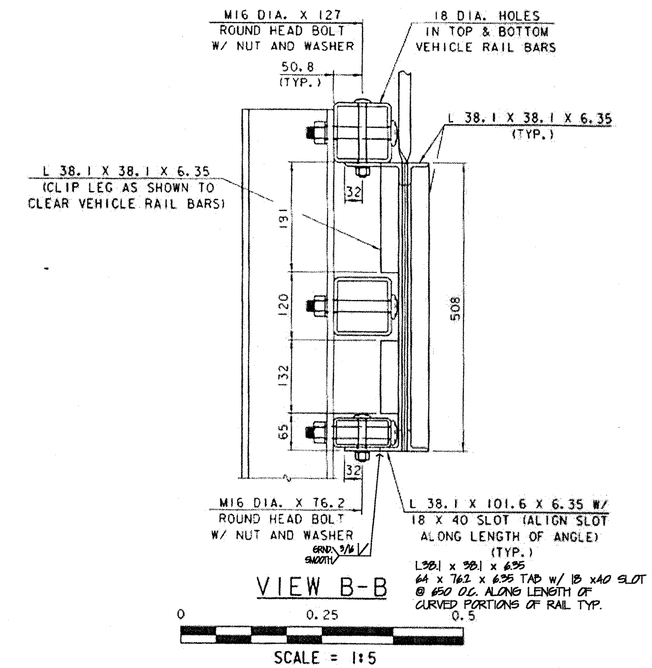

VIEW B-B

0 0.25 0.5

SCALE = 1:5

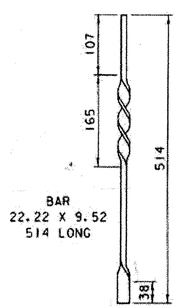

PART "A"

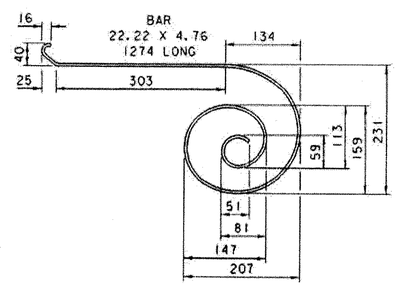

PART "C"

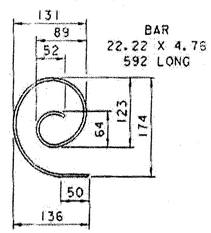

PART "D"

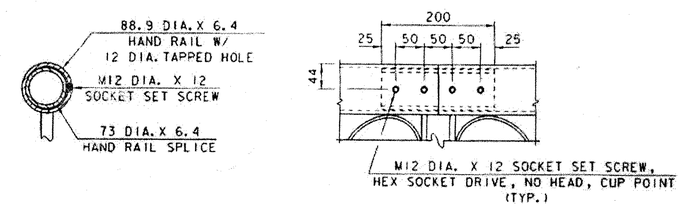

HAND RAIL SPLICE DETAILS

0 0.25 0.5

SCALE = 1:5

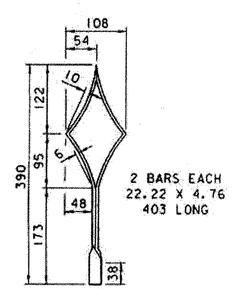

PART "B"

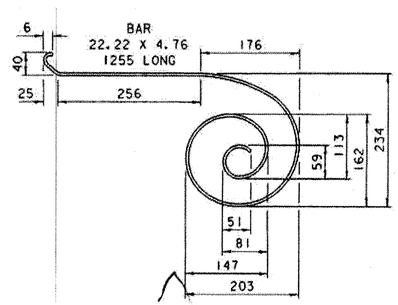

PART "E"

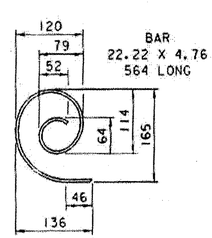

PART "F"

PANEL PARTS

0 0.25 0.5

SCALE = 1:5

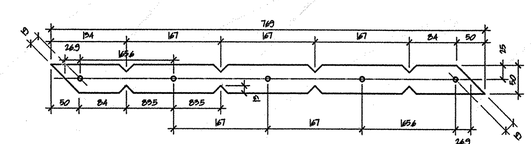

LATTICE DETAIL

0 0.25 0.5

SCALE = 1:5

RECEIVED
CK'D BY G. Roy OK'D BY
9-8-03
SEP 08 2003
RESUBMIT APPROVED AS NOTED
BY RRW DATE 9-9-03

REVISIONS	REMARKS

ONE PRUYN'S ISLAND DR.
GLENS FALLS, N.Y. 12801

RIVERSIDE FAB, INC.

PHONE # 1(518) 798-3533
FAX # 1(518) 798-1711

DATE	8/28/03	PROJECT	PROPOSED IMPROVMENT BRIDGE PROJECT
DRAWN BY	CCE	LOCATION	BRATTLEBORO, VT.
CHK'D BY		CUSTOMER	RENAUD BROTHERS, INC.
HOLES		ARCHITECT	STATE OF VERMONT, AGENCY OF TRANSPORTATION
BOLTS		JOB NO.	RFC 589
PAINT		SHEET NAME	PANEL PIECES & DETAILS
SCALE	AS NOTED		

PRINT RECORD

DATE	NO.	
		080

DRAWING NUMBER **F1**