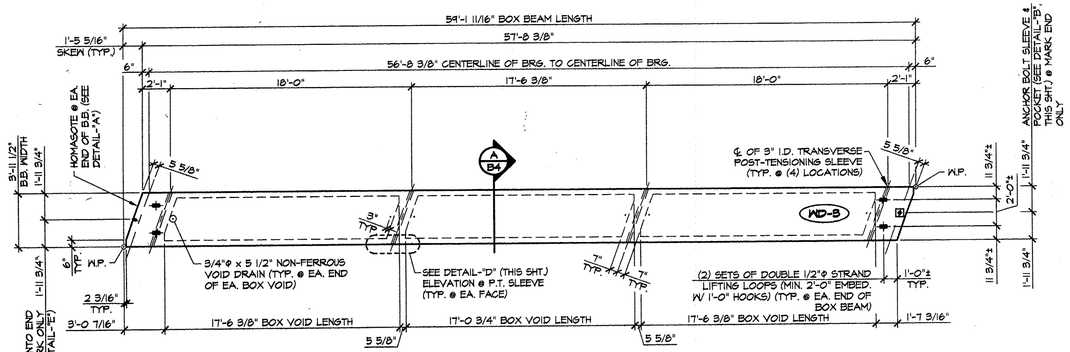

1 / B4 DIMENSIONAL PLAN VIEW IN FORM

3/16" = 1'-0"

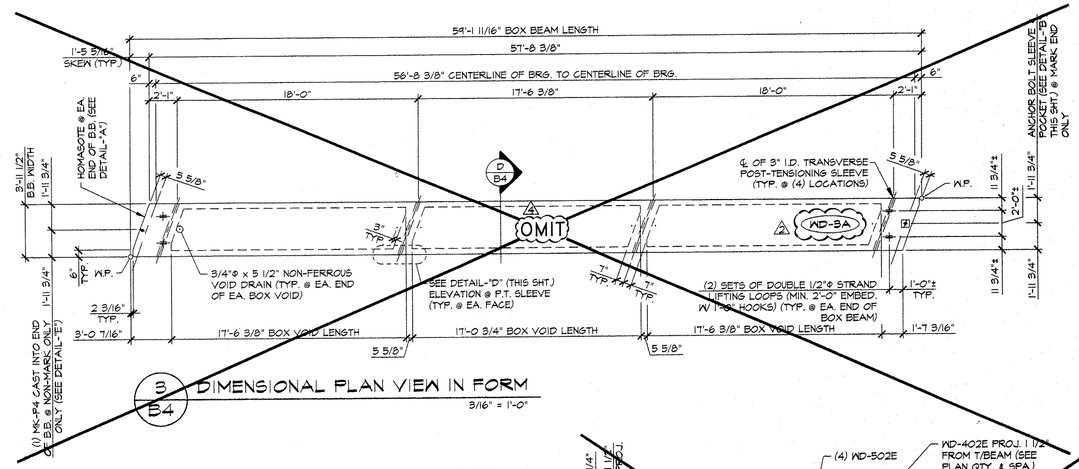

3 / B4 DIMENSIONAL PLAN VIEW IN FORM

3/16" = 1'-0"

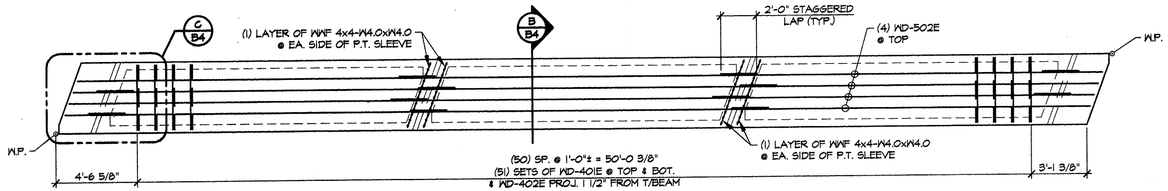

2 / B4 REINFORCING PLAN VIEW IN FORM

1/4" = 1'-0"

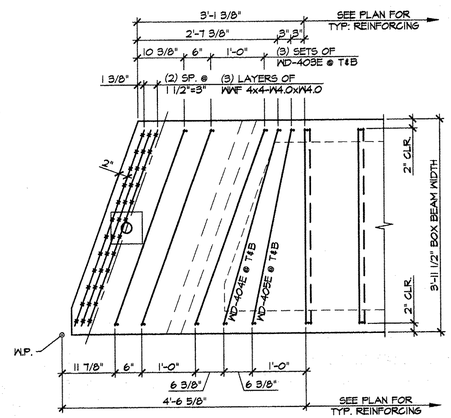

C / B4 END BLOCK REINFORCING PLAN

3/4" = 1'-0"

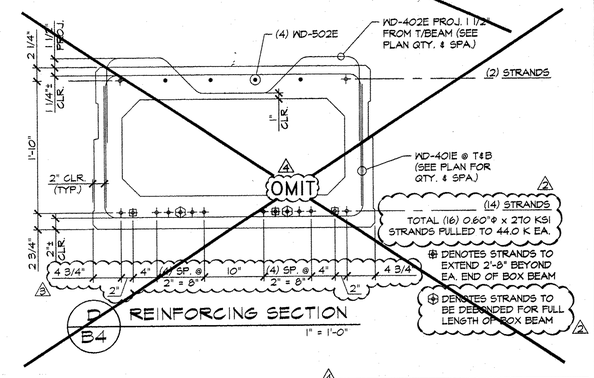

D / B4 REINFORCING SECTION

1" = 1'-0"

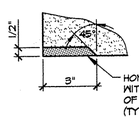

DETAIL - "A"

3" = 1'-0"

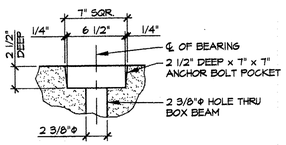

DETAIL - "B"

1 1/2" = 1'-0"

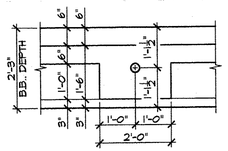

DETAIL - "D"

1/2" = 1'-0"

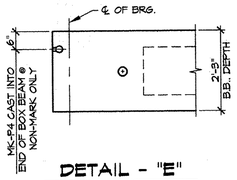

DETAIL - "E"

1/2" = 1'-0"

DETENSIONING SCHEDULE

(14) STRANDS N.T.S.

MARK:	WD-3	QTY.: 10	WT.: 17.28 T	VOL.: 11.13 cy
MARK:		QTY.:	WT.:	VOL.:

MATERIAL LIST / BEAM

ITEM	MARK	DESCRIPTION	QTY./BEAM WD-3	
1	401E	#4 BENT BAR (EPOXY COATED)	102	
2	402E	#4 BENT BAR (EPOXY COATED)	51	
3	403E	#4 BENT BAR (EPOXY COATED)	12	
4	404E	#4 BENT BAR (EPOXY COATED)	4	
5	405E	#4 BENT BAR (EPOXY COATED)	4	
6				
7				
8	502E	#5 x 57'-4" (E.C. W/ (3) 2'-0" STAGGERED LAPS)	4	
9				
10		WWF 4x4-W4.0xW4.0 [1'-11 1/2" x 3'-10"]	10	
11				
12				
13	MK-P4	DAYTON 1/2"Φ F-42 LOOP FERRULE INSERT (GALV.)	1	
14				
15		3'-1 1/2" x 1'-4" x 17'-0 3/4" BOX VOID	1	
16		3'-1 1/2" x 1'-4" x 17'-6 3/8" BOX VOID	2	
17		3/4"Φ x 5 1/2" NON-FERROUS VOID DRAIN	6	
18		DOUBLE 1/2"Φ STRAND LIFTING LOOPS	4	
19				

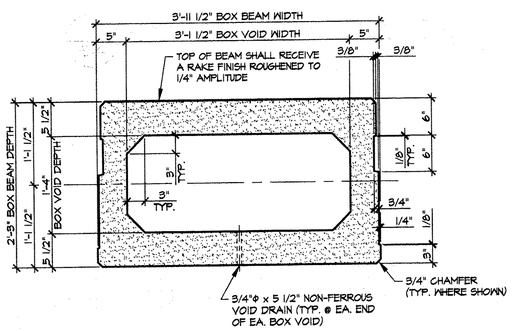

A / B4 DIMENSIONAL SECTION

1" = 1'-0"

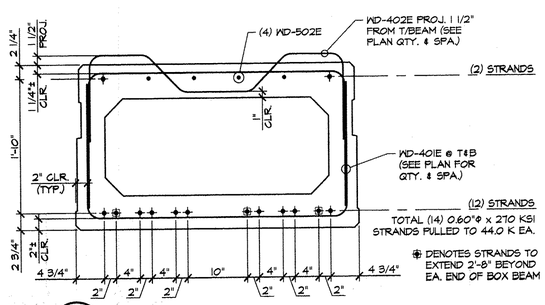

B / B4 REINFORCING SECTION

1" = 1'-0"

△4 4-11-07 REVISE BEAM QUANTITIES & OMIT BEAM "WD-3A"
△3 3-20-07 REVISE STRAND PATTERN
△2 3-9-07 ADD "WD-3A" DETAILS
△1 2-13-07 REVISE BOX VOIDS

APPROVAL STAMP:

J.P. CARRARA & SONS INC.
Precast & Prestress Manufacturer
2464 CASE STR., MIDDLEBURY, VERMONT 05753 Phone:(802)388-6361 Fax:(802)388-9010

T. BUCK CONSTRUCTION, INC.
CONTRACTOR
AUBURN, MAINE

STATE OF VERMONT A.O.T.
COUNTY OF WINDSOR

TOWN OF WOODSTOCK
US ROUTE 4 OVER OTTAUQUECHEE RIVER
BRIDGE NO. 50 PROJECT NO. BHF 020-2(32)

P/S BOX BEAM DETAILS

DATE: JAN. 9, 2007
SCALE: NOTED
CHKD: D.F. DFTM: B.L.
JOB NO: 23249-06
DWG. NO: B4

F:\VT-Bridges\23249-06 Woodstock\B4.dwg, 4/11/2007 9:39:32 AM