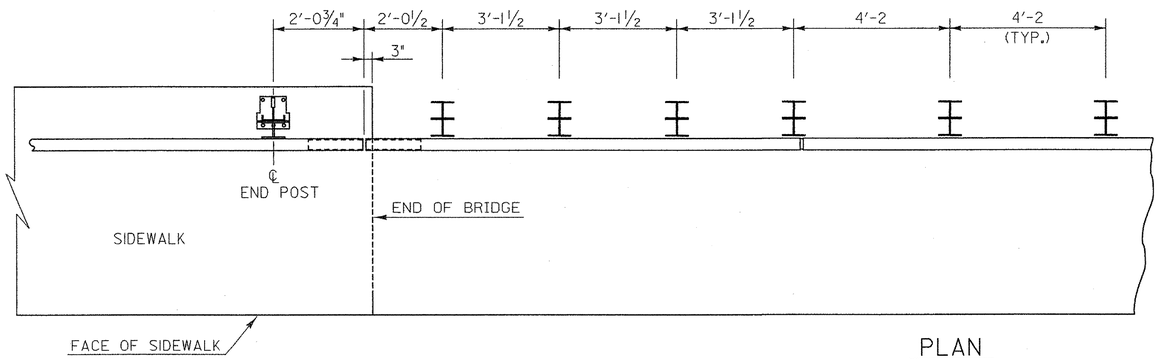

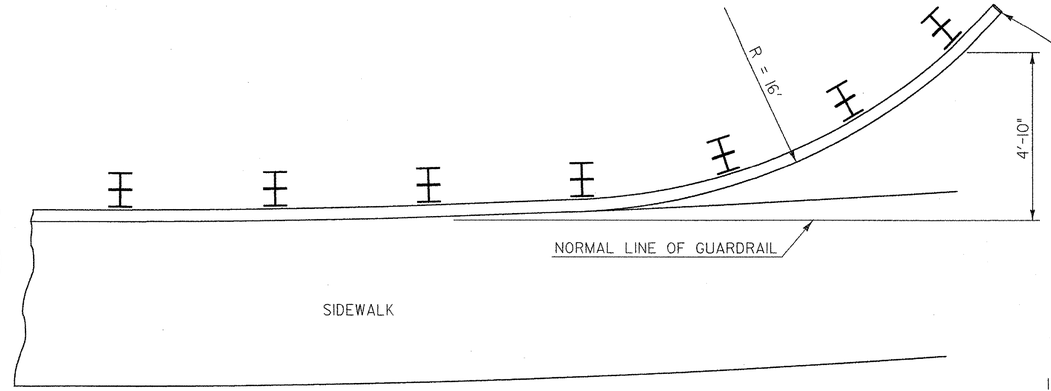

SEE SHEET 49 FOR END CAP DETAILS (ALL COSTS INCLUDED IN ITEM 621.74)

PLAN

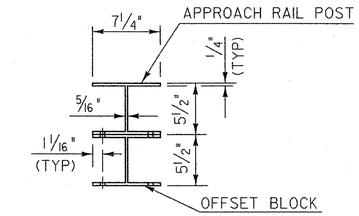

PLAN

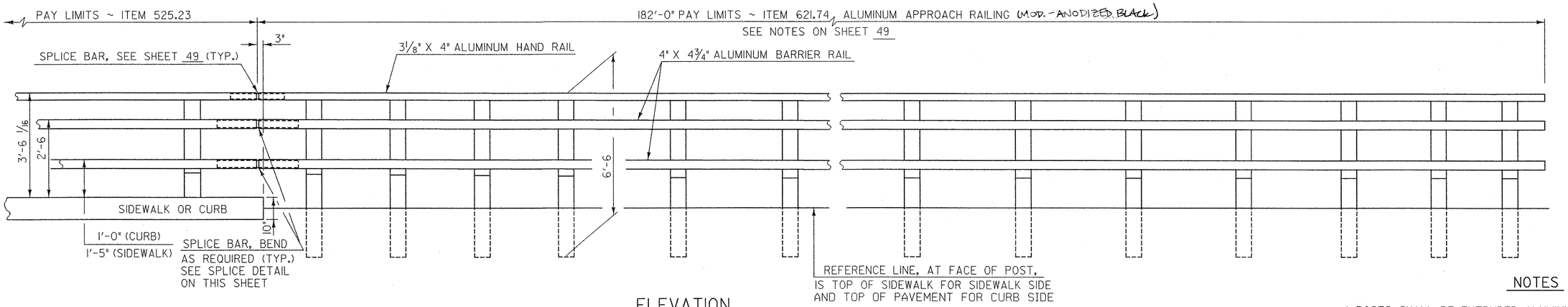

ELEVATION

NOTES

1. POSTS SHALL BE EXTRUDED ALUMINUM.
2. ALL STRUCTURAL STEEL SHALL BE AASHTO M270 GRADE 36 GALVANIZED AFTER FABRICATION.
3. ALL ITEMS NOT OTHERWISE INDICATED SHALL MEET THE SPECIFICATION REQUIREMENTS OF THE STANDARD SHEETS ON WHICH THEY ARE DETAILED.
4. SEE STANDARD G-1 FOR STEEL BEAM GUARD RAIL DETAILS. SEE SHEETS 48 AND 49 FOR ALUMINUM BRIDGE RAILING DETAILS.
5. THE COST OF ALL MATERIALS AND LABOR FOR THE SPLICE BETWEEN THE ALUMINUM APPROACH RAILING AND THE STEEL BEAM GUARD RAIL SHALL BE SUBSIDIARY TO ITEM 621.74, ALUMINUM APPROACH RAILING (MOD.-ANODIZED BLACK).
6. DETAILS ARE SHOWN FOR TRANSITION TO A 3 RAIL ALUMINUM BRIDGE RAILING.
7. DIMENSIONS SHOWN ARE FROM A REFERENCE LINE AT THE FACE OF POST FOR A NORMAL CROWNED SECTION. APPROPRIATE CORRECTIONS SHALL BE MADE FOR CROSS SLOPES OTHER THAN A NORMAL SECTION.
8. INSTALL HAND RAIL END CAP AND BARRIER RAIL END CAP AT END OF RAILING. SEE SHEET 49 FOR DETAILS.

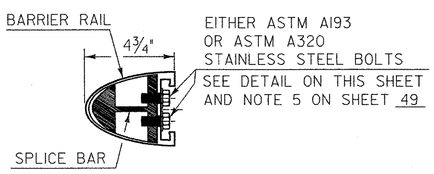

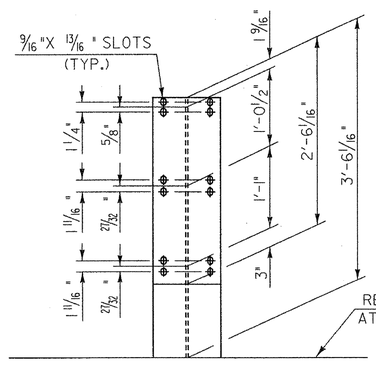

FRONT ELEVATION

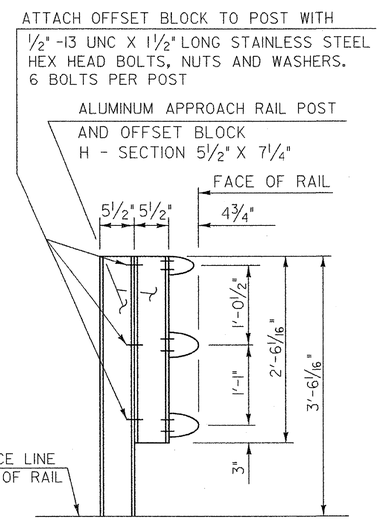

SIDE ELEVATION

APPROACH RAIL DETAILS

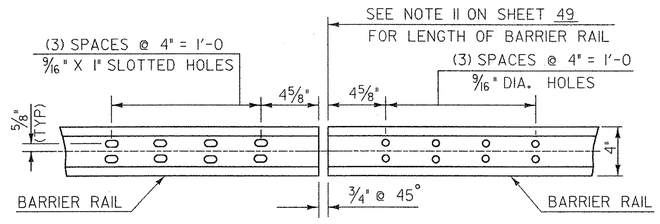

ELEVATION OF BARRIER RAIL (FROM BACK) AT ALL INTERMEDIATE RAIL SPLICES

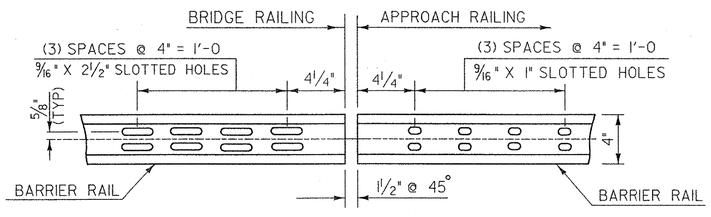

ELEVATION OF BARRIER RAIL (FROM BACK)

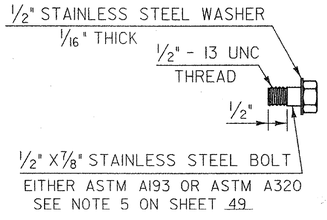

STAINLESS STEEL BOLT DETAILS

VHB Vanasse Hangen Brustlin, Inc.

STATE OF VERMONT
AGENCY OF TRANSPORTATION

Town Of WOODSTOCK	Bridge No. 50
Highway No. U. S. ROUTE 4	Log Sta. / Surv. Sta.
U. S. ROUTE 4 OVER OTTAUQUECHEE RIVER	
APPROACH RAILING DETAILS (2 OF 2)	
Designed By VTRANS	Drawn By VTRANS
Checked By T. S. BRYANT Date 10/06	Bridge Design Supervisor M. A. COLGAN Date 10/06
PROJECT WOODSTOCK	PROJECT NO. BHF 020-2 (32)
I.G.C. Info.	
Bridge Sheet No. ZJ028RL	Sheet 47 of 71

VHB NO. 51298

plot date: 10/11/2006