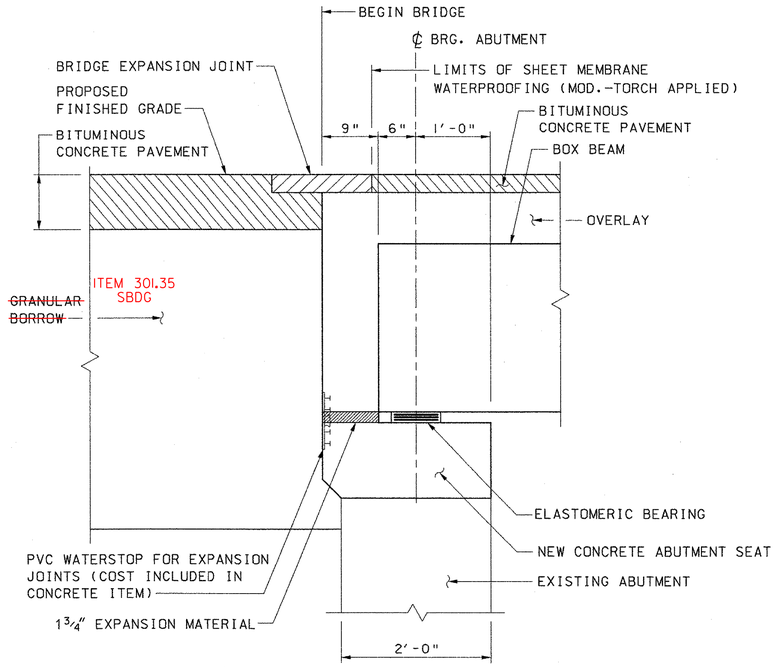

END OF BRIDGE DETAIL

(ABUTMENT 1 SHOWN, ABUTMENT 2 SIMILAR)
(SHOWN PERPENDICULAR TO ABUTMENT)
SCALE: 1" = 1'-0"

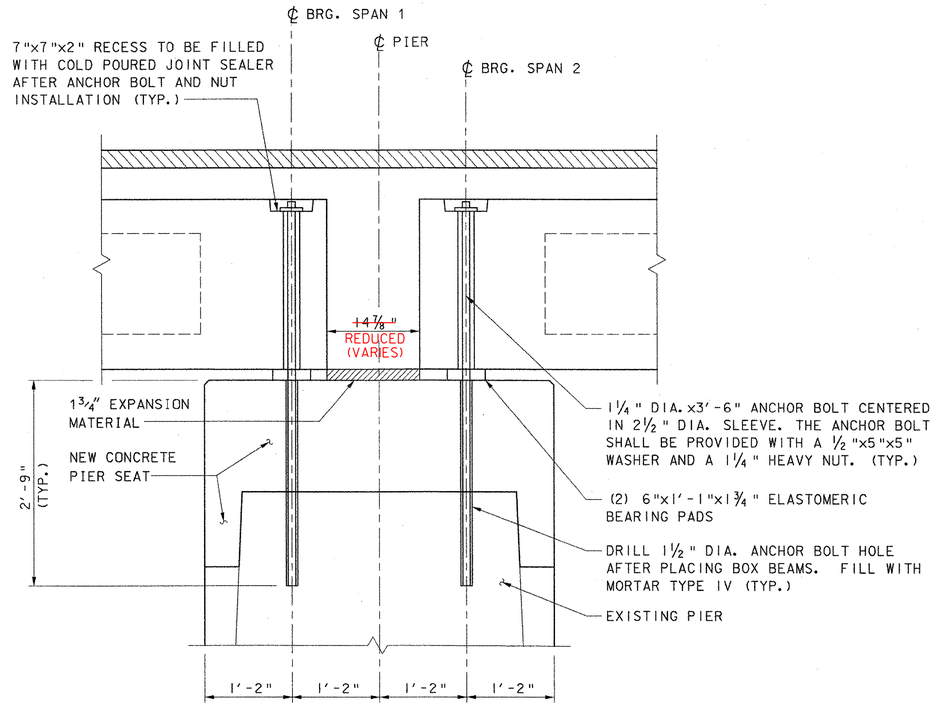

TYPICAL SECTION OVER PIERS

(PIER 1 SHOWN, PIER 2 SIMILAR)
(SHOWN PERPENDICULAR TO ℄ PIER)
SCALE: 1" = 1'-0"

ANCHOR BOLT NOTE:

1. FABRICATOR SHALL SUPPLY A SELF ADHESIVE COMPRESSIBLE SEALER BETWEEN THE BOTTOM OF THE UNITS AND THE BRIDGE SEAT. THIS COMPRESSIBLE SEALER SHALL SURROUND THE 2½" DIA. SLEEVE IN THE UNIT. THE PURPOSE OF THE SEALER IS TO FACILITATE PLACEMENT OF THE COLD POURED JOINT SEALER AROUND THE ANCHOR BOLTS.

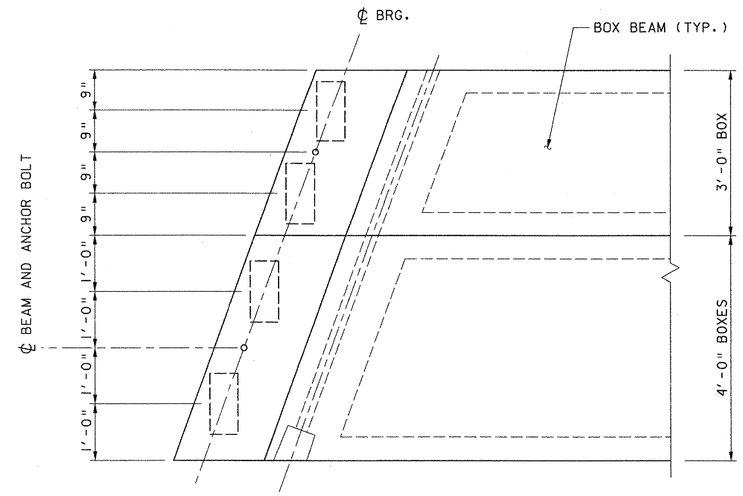

TYPICAL BEARING PLACEMENT

(ANCHOR BOLTS AT PIERS ONLY)
SCALE: 3/4" = 1'-0"

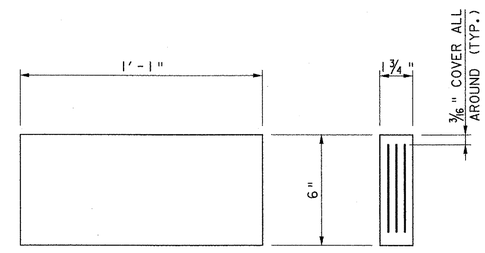

PLAN SIDE VIEW

ELASTOMERIC BEARING DETAIL

* 2 - 0.50" INTERNAL LAYERS OF ELATOMERIC ALTERNATING WITH 3 - ⅛" STEEL REINFORCING PLATES
SCALE: 3" = 1'-0"

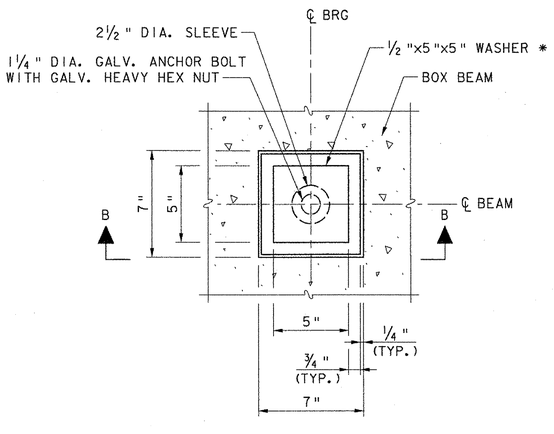

* EM-3 ½" x 5" x 5" WASHER WITH 1½" DIA. HOLE GALVANIZED.

ANCHOR BOLT DETAIL

NOT TO SCALE

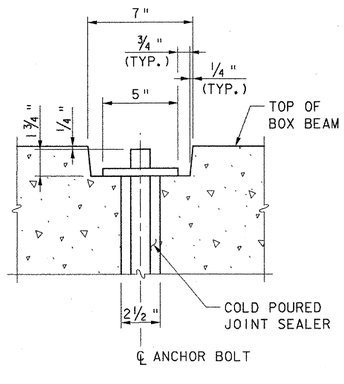

SECTION B-B

NOT TO SCALE

ELASTOMERIC BEARING NOTES:

1. ALL COST FOR BOX BEAM ELASTOMERIC BEARINGS SHALL BE PAID UNDER ITEM 531.10, BEARING DEVICE ASSEMBLY (ELASTOMERIC).
2. ALL MATERIALS AND FABRICATION SHALL BE PER AASHTO DIVISION II SECTION 18.2 AND AASHTO MATERIAL SPECIFICATION M251.

DESIGN CRITERIA: (AASHTO METHOD "B")

A) TEMPERATURE RANGE: 80° F

B) 50 DUROMETER ELASTOMER, TEMPERATURE GRADE 3

C) MAXIMUM BEARING STRESS: 600 PSI

D) DESIGN ROTATION: 0.015 RAD.

E) MAX. REACTION/BEAM:

DEAD LOAD: 54 K
LIVE LOAD: 29 K (W/ IMPACT)

VHB Vanasse Hangen Brustlin, Inc.

STATE OF VERMONT
AGENCY OF TRANSPORTATION

Town Of WOODSTOCK	Bridge No. 50
	Log Sta.
Highway No. U.S. ROUTE 4	Surv. Sta.
U.S. ROUTE 4 OVER OTTAUQUECHEE RIVER	
SUPERSTRUCTURE DETAILS	
Designed By K.G. KRETSCH	Drawn By B.J. MASSE
Checked By S.M. HODGDON Date 9/06	Bridge Design Supervisor M.A. COLGAN Date 9/06
PROJECT WOODSTOCK	PROJECT NO. BHF 020-2 (32)
I.G.C. Info.	
Bridge Sheet No. ZJ028BRG	Sheet 36 of 71

VHB NO. 51298 plot date: 9/14/2006