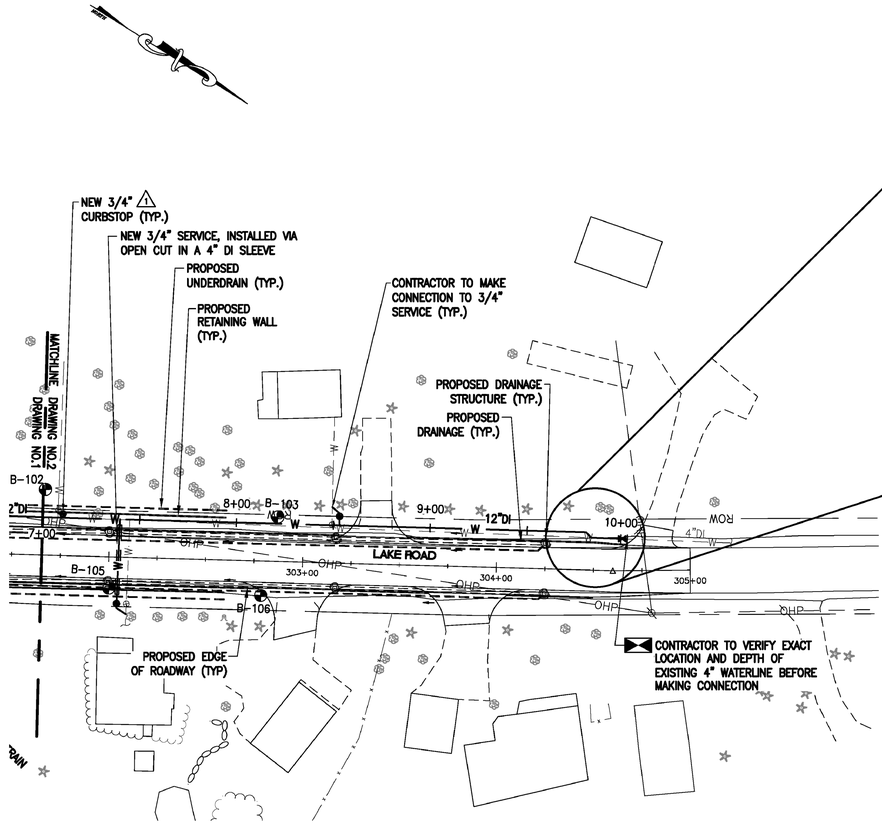

PLAN
SCALE: 1"=40'

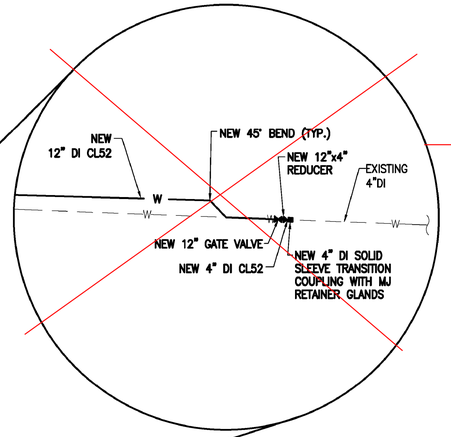

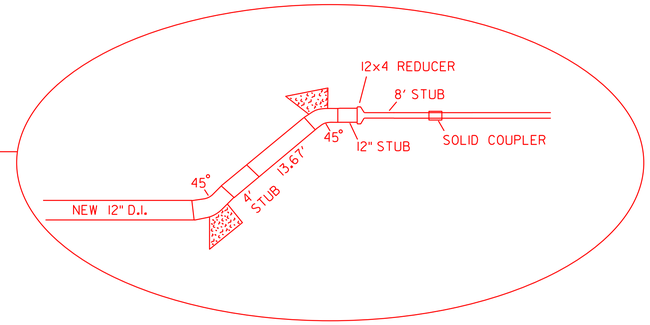

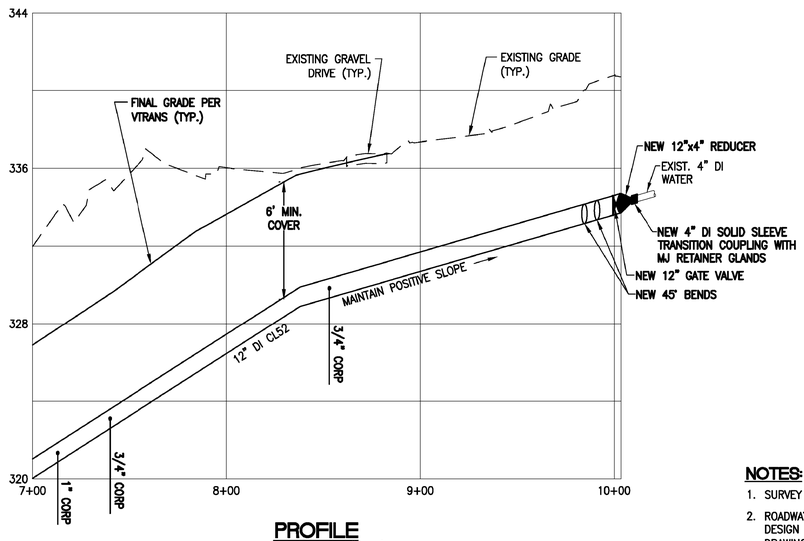

PROFILE
SCALE: H: 1"=40'
V: 1"=4'

NOTES:

1. SURVEY AND SUBSURFACE INFORMATION PROVIDED BY VTRANS.
2. ROADWAY, ROADWAY DRAINAGE, UNDERDRAIN, AND RETAINING WALL DESIGN BY VTRANS. THIS INFORMATION IS ONLY SHOWN ON THIS DRAWING FOR PURPOSES OF LOCATING THE NEW 12" D.I. WATERLINE.
3. THE EXISTING 12" AND 4" WATERLINES SHALL REMAIN IN OPERATION AND MAINTAINED DURING CONSTRUCTION. THE NEW WATERLINE SHALL BE PRESSURE TESTED, INSPECTED, CHLORINATED AND APPROVED PRIOR TO TRANSFERRING SERVICE TO THE NEW WATERLINE. NO WATER SHALL BE ALLOWED IN THE NEW WATERLINE UNTIL APPROVED BY THE OWNER AND ENGINEER.
4. THE CONTRACTOR SHALL INSTALL A MECHANICAL PLUG IN THE END OF ALL PIPE WORK AT THE COMPLETION OF EACH WORK DAY TO SEAL IT FROM WATER AND SOIL.

CIVIL & ENVIRONMENTAL ENGINEERS
6 Market Place, Suite 2
Essex Jct., VT 05452
P: 802.879.7733
F: 802.879.1742
FA&A
FORCIER ALDRICH & ASSOCIATES

STATE OF VERMONT
JASON R. BOOTH
No. 9335
Civil
LICENSED PROFESSIONAL ENGINEER

TOWN OF MILTON
COUNTY OF CHITTENDEN

MILTON
STP 5800 (2)

NO.	DATE	REVISION DESCRIPTION	CHECKED
1	1/5/10	RELOCATION OF CURBSTOP STA. 7+10	JAB

LAKE ROAD PLAN AND PROFILE STATION 7+00 TO 10+03

DESIGNED JAB	PROJECT NO. 09033
DRAWN JEB	DRAWING NO. 103 OF 104
CHECKED WAE	
DATE MAY, 2009	