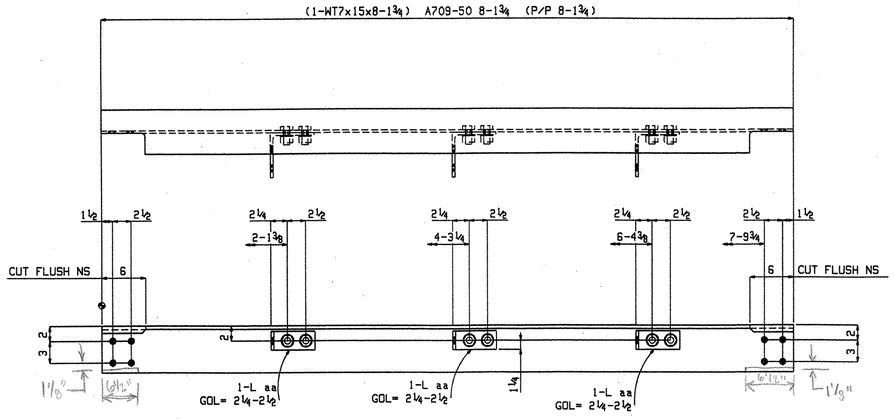

ONE BEAM FB11_L

W 6 15/16 x ¼
F 6¾ x ⅜

SHOP BOLTS:
6-⅞x2 A325

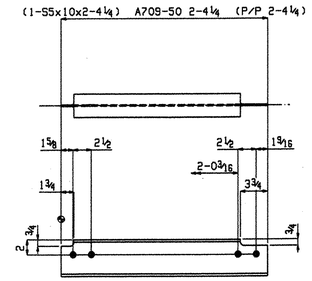

3 BEAMS FB12_R

W 5x3/16
F 3x5/16

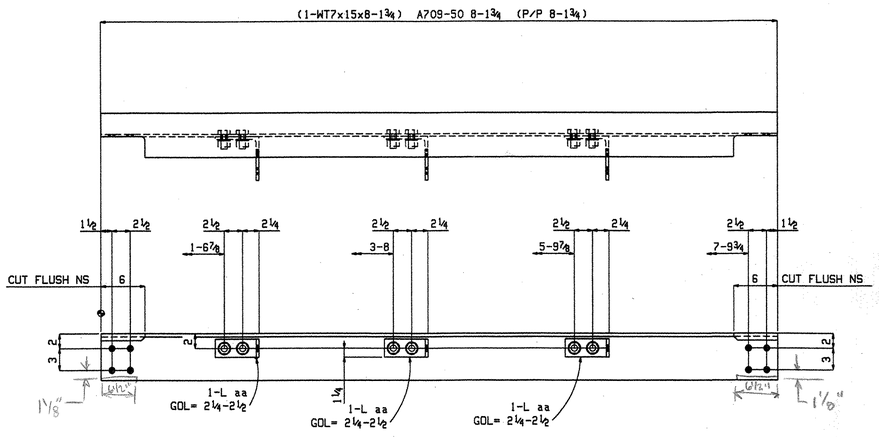

ONE BEAM FB11_R

W 6 15/16 x ¼
F 6¾ x ⅜

SHOP BOLTS:
6-⅞x2 A325

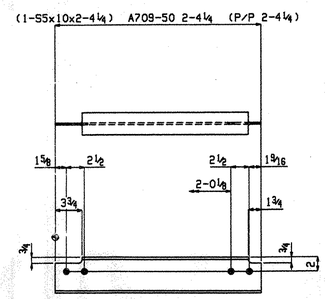

3 BEAMS FB12_L

W 5x3/16
F 3x5/16

BILL OF MATERIAL

Quantity Total	Description	Length		Piece Mark	Remarks
ONE	BEAM			FB11_L	
1	WT7x15	8	1¾	FB11_L	A709-50
3	L6x6x⅜	0	2½	aa	A709-50
6	⅞ Dia A325	0	2		1HD WASH
	FIELD BOLTS				
8	⅞ Dia A325	0	2		1 HD WASH
ONE	BEAM			FB11_R	
1	WT7x15	8	1¾	FB11_R	A709-50
3	L6x6x⅜	0	2½	aa	A709-50
6	⅞ Dia A325	0	2		1HD WASH
	FIELD BOLTS				
8	⅞ Dia A325	0	2		1 HD WASH
3	BEAM			FB12_R	
3	S5x10	2	4¼	FB12_R	A709-50
	FIELD BOLTS				
12	⅞ Dia A325	0	2		1 HD WASH
3	BEAM			FB12_L	
3	S5x10	2	4¼	FB12_L	A709-50
	FIELD BOLTS				
12	⅞ Dia A325	0	2		1 HD WASH

REV.	REMARKS	DATE	DWN	CHK	APP	Q.A.	NO.	DIA.	LGT	TYPE	WASHER
	OUT FOR APPROVAL	10/15									
	OUT FOR APPROVAL										
	ISSUED TO SHOP	10/29									
	FIELD & OFFICE										

PROJECT NO. BHF 028-1(2) STATE PROJECT NO. F128(9)

MATERIAL : AS NOTED | ELECTRODES : E70LH | HOLES : 15/16 ϕ UNO | SHOP BOLTS : ⅞ϕ

SURFACE PREPN & PAINT : GALVANIZED

DESCRIPTION : STRUCTURAL DETAILS

JOB : GRAND ISLE-NORTH HERO BRIDGE
COUNTY OF GRANDE ISLE, VT.

CUSTOMER : STATE OF VERMONT HIGHWAY DEPARTMENT

	DATE
DRAWN BY: LCL	OCTOBER 2007
CHECKED BY: LB	OCTOBER 2007
APPROVED BY	
Q. A.	
JOB NO.: 342	DRG. NO.: 9
Fab: Job:	REV.

CASCO BAY STEEL STRUCTURES, INC.
75 SPRING HILL ROAD SACO, MAINE 04072
PHONE (207) 282-7360 FAX. (207) 282-1179

Nov 01 2007 10:59:37 AM

RECEIVED
CK'D BY ____ CK'D BY ____
NOV 05 2007
RESUBMIT ____ APPROVED ____
BY ____ DATE 11/5/07

RECEIVED
CK'D BY ____ CK'D BY ____
NOV 05 2007
RESUBMIT ____ APPROVED ____
BY ____ DATE

DRAWINGS PREPARED BY, PATRIOT DRAFTING LLC.

JOB NO.	DRG NO.
342	9

050-55