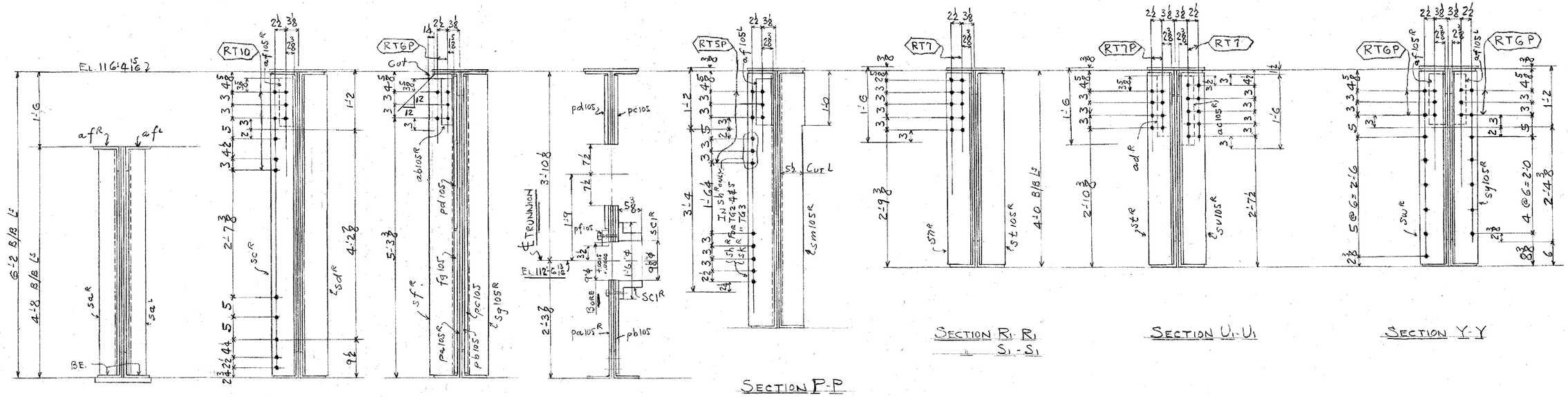

SECTION L2-L2 SECTION N-N SECTION O-O SECTION O1-O1

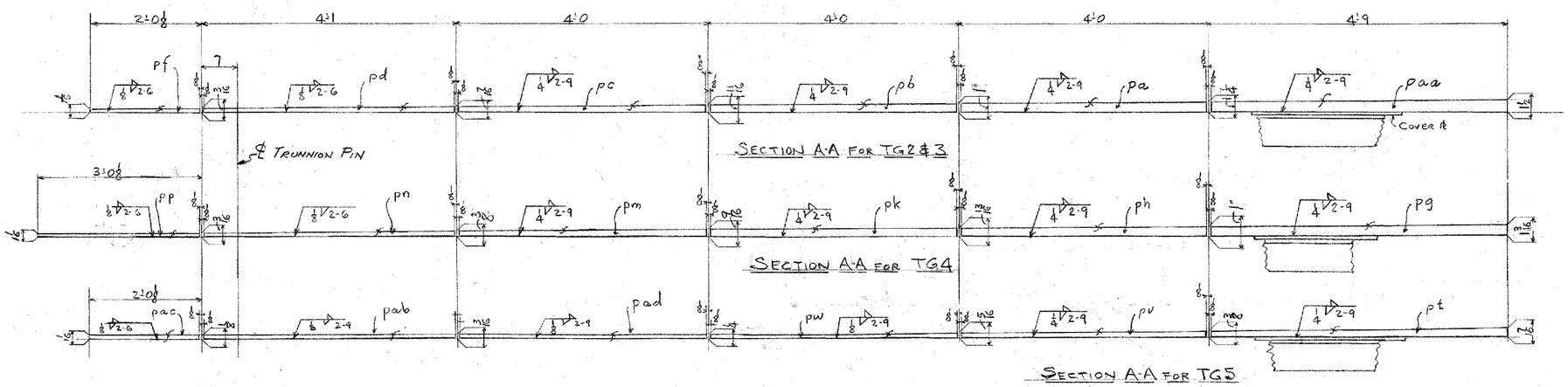

CONTINUED

LINE	Total No. of Pieces on the Order	No. of Pieces on the Girder	MATERIAL SHAPE					LENGTH Feet	LENGTH Inches	ASSEMBLING MARK	REMARKS	CALCULATED WEIGHT FOR ONE SHIP. PIECE	ORDERED	ITEM
6		12	L	6	4	7/16		3	11	st^R_L				
6		12	L	6	4	7/16		3	11	$sy105^R_L$				
6		12	L	6	4	7/16		3	11	sw^R_L			40-0	1007
6		12	L	6	4	7/16		3	11	$sy105^R_L$				
6		72	L	4	4	3/8		3	11	$sp105^R_L$	CRIMP			
6		24	L	4	4	3/8		3	11 13/16	$sa105^R_L$	CRIMP			
6		48	L	3½	3½	3/8		0	11	$af105^R_L$				
6		12	L	3½	3	3/8		0	11	$ab105^R_L$				
6		12	L	3½	3½	3/8		1	5	$ac105^R_L$				
70		12	L	3½	3½	3/8		1	2	ad^R_L			S	
71														
72		120	SB	7/8									S	
73														
74		24	7/8	CAP SCREWS, 0 3¾										
75		24	7/8	SPLIT LOCK WASHERS										

LINE	Total No. of Pieces on the Order	No. of Pieces on the Girder	MATERIAL SHAPE	LENGTH Feet	LENGTH Inches	ASSEMBLING MARK	REMARKS	CALCULATED WEIGHT FOR ONE SHIP. PIECE	ORDERED	ITEM
16	12		CAST STEEL COLLARS			SC 1/8	J9758-JH1	110		
17	48		¾" TAP BOLTS - mb							
18										
19										
20										
21										
22										
23										
24										
25										
26										
27										
28										
29										
30										

LINE	Total No. of Pieces on the Order	No. of Pieces on the Girder	MATERIAL SHAPE	LENGTH Feet	LENGTH Inches	ASSEMBLING MARK	REMARKS	CALCULATED WEIGHT FOR ONE SHIP. PIECE	ORDERED	ITEM
31										
32										
33										
34										
35										
36										
37										
38										
39										
40										
41										
42										
43										
44										
45										

LINE	Total No. of Pieces on the Order	No. of Pieces on the Girder	MATERIAL SHAPE	LENGTH Feet	LENGTH Inches	ASSEMBLING MARK	REMARKS	CALCULATED WEIGHT FOR ONE SHIP. PIECE	ORDERED	ITEM
46										
47										
48										
49										
50										
51										
52										
53										
54										
55										
56										
57										
58										
59										
60										
61										
62										
63										
64										
65										

STATE OF VERMONT
STATE HIGHWAY DEPARTMENT
FEDERAL PROJECT F128(9)
GRAND ISLE-NORTH HERO BRIDGE
COUNTY OF GRAND ISLE, VT.

TRUNNION GIRDERS
TG2-3-4R & 5R

AMERICAN BRIDGE COMPANY

REFERENCE SHEET

PROJECT NAME: NORTH HERO-GRANDE ISLE
PROJECT NUMBER: BHF 028-1(21)

FILE NAME: structure\s92b284cleandsca
PROJECT LEADER: M. EVANS-MONGEON
DESIGNED BY: S. SCRIBNER
PLOT DATE: 18-OCT-2007
DRAWN BY: L. DUQUETTE
CHECKED BY: S. SCRIBNER
SHEET 38 OF 41