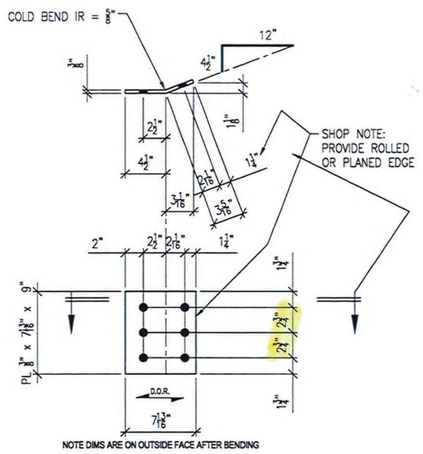

2 REQ'D ~ Mk. x85a

MATERIAL A709-50 T2

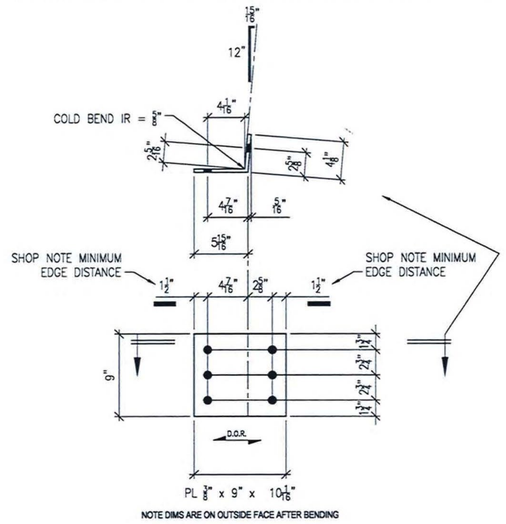

2 REQ'D ~ Mk. x85b

MATERIAL A709-50 T2

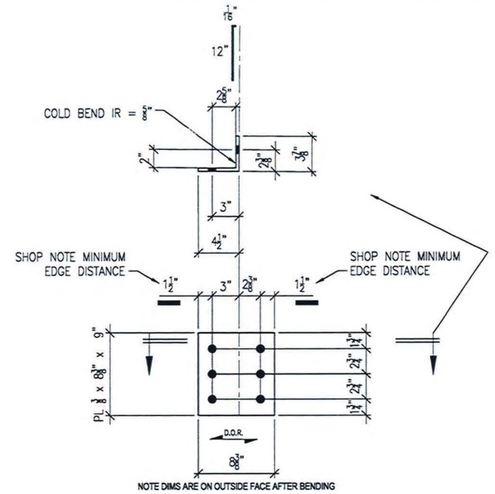

2 REQ'D ~ Mk. x85c

MATERIAL A709-50 T2

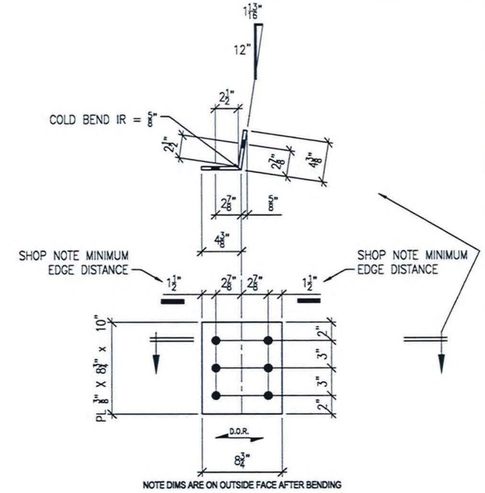

2 REQ'D ~ Mk. x85d

MATERIAL A709-50 T2

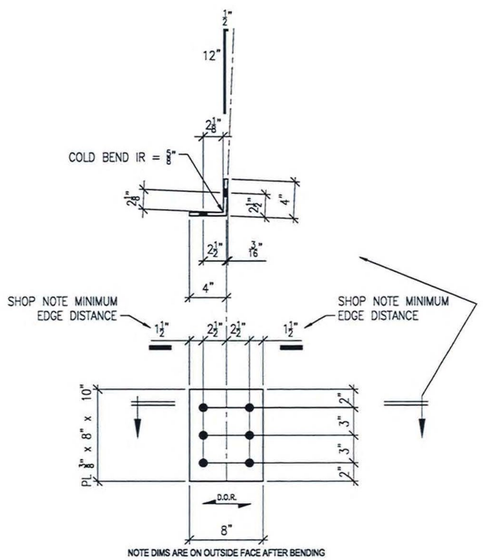

2 REQ'D ~ Mk. x85f

MATERIAL A709-50 T2

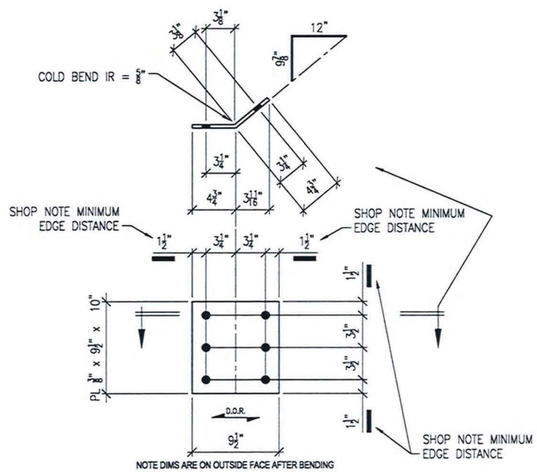

2 REQ'D ~ Mk. x85h

MATERIAL A709-50 T2

ALL HOLES TO BE PUNCHED U.N.O.

☑ NO EXCEPTION TAKEN
☐ REJECTED
☐ MAKE CORRECTIONS NOTED
☐ REVISE AND RESUBMIT
☐ SUBMIT SPECIFIED ITEM

CHECKING IS ONLY FOR GENERAL CONFORMANCE WITH THE DESIGN CONCEPT OF THE PROJECT AND GENERAL COMPLIANCE WITH THE INFORMATION GIVEN IN THE CONTRACT DOCUMENTS. ANY ACTION SHOWN IS SUBJECT TO THE REQUIREMENTS OF THE PLANS AND SPECIFICATIONS. CONTRACTOR IS RESPONSIBLE FOR DIMENSIONS WHICH SHALL BE CONFIRMED AND CORRELATED AT THE JOB SITE; FABRICATION PROCESSES AND TECHNIQUES OF CONSTRUCTION; COORDINATION OF HIS WORK WITH THAT OF ALL OTHER TRADES AND THE SATISFACTORY PERFORMANCE OF THE WORK.

DATE 5/9/12 BY CHA PKK/JJ

LEGEND:

℄ = CENTERLINE
CTR'D = CENTERED
C/C = CENTER TO CENTER
FLG = FLANGE
TOP = TOP
BTM = BOTTOM
RDFH = RUNNING DIMENSIONS FROM HERE
= FIELD BOLTS (QUANTITY) DIAMETER x LENGTH
= ALTERNATE HOLE DIAMETER
TYP = TYPICAL
N/S = NEAR SIDE
F/S = FAR SIDE
B/S = BOTH SIDES
BTS = BOLT TO SHIP
SHP'G BOLT = SHIPPING BOLT
= SHIPPING BOLT
D.O.R. = DIRECTION OF ROLL
T2 = CHARPY V-NOTCH TESTING REQUIRED
F2 = FRACTURE CRITICAL MATERIAL
= FIELD DRILLED HOLE
= FIELD DRILLED HOLE

ALL DIMENSIONS HAVE BEEN FIELD VERIFIED
BY:_____ DATE:_____

NO.	DATE	BY	REVISION
A	04/25/12	RC	FOR APPROVAL

STS STEEL, INC.
ENGINEERS • FABRICATORS • ERECTORS
PH: (518) 370-2693 FAX: (518) 370-2696

DRAWING TITLE
UPPER STEEL (STANDARDS)

PROJECT No. US RT 2 BRIDGE No 24		FEDERAL AID No.	
ENGINEER :	CHA		
CUSTOMER :	Harrison & Burrowes Bridge Constructors, Inc.		
PROJECT :	RICHMOND, VT – TRUSS BRIDGE REHAB		
	RICHMOND, VT		
HOLES: 15/16"ø U.N.O.	PAINT: PER SPEC	DATE: 04/17/12	
BOLTS: A325 U.N.O.	DR.BY: PG	JOB NO. 1156	
WELDS: AWS D1.5	CHK.BY: SG	DWG NO. x85	

D.O.R.
WIDTH
LENGTH
℄