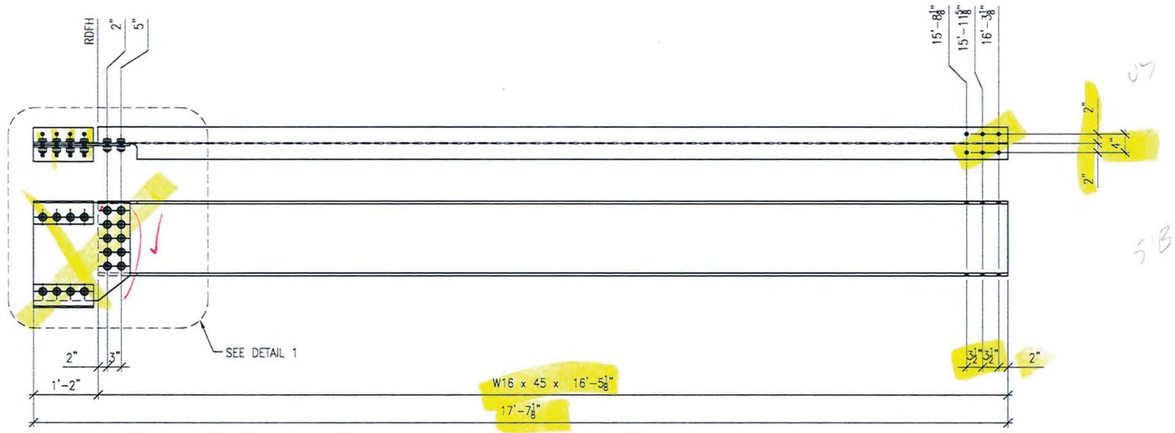

ONE REQ'D ~ Mk. M46A

LIFTING WEIGHT
?
lbs

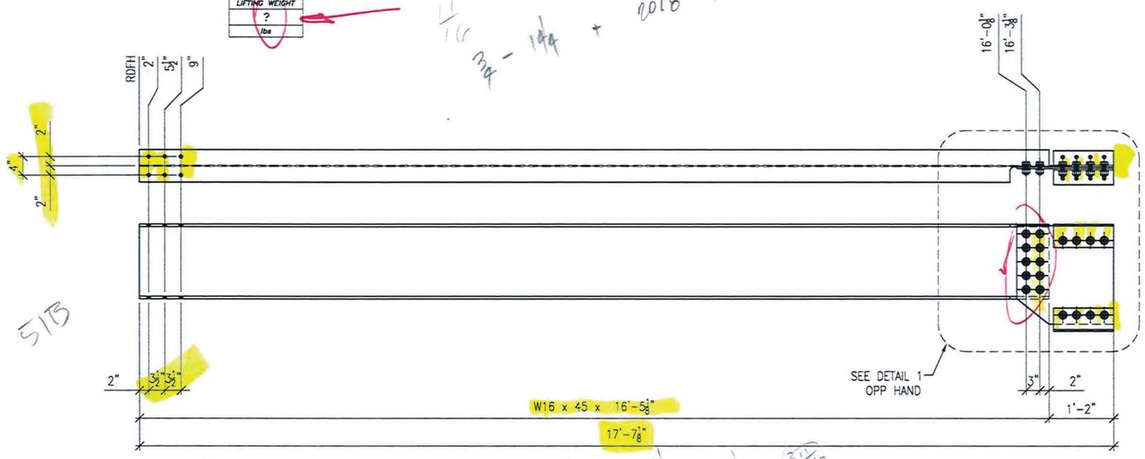

ONE REQ'D ~ Mk. M46B

LIFTING WEIGHT
?
lbs

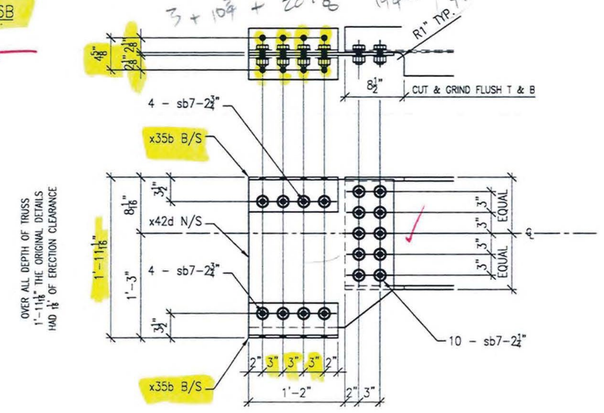

DETAIL 1

BILL OF MATERIALS

LINE	SEQ	SHIPPING PCS	ASSEMBLY PCS	MARK	SHAPE	DESCRIPTION	LENGTH ft	LENGTH in	REMARKS END EDGE DESCR	REMARKS	MATL GRADE	MATL REMARK	WEIGHT	HEAT NO
				SHOP BILL							MATERIAL ASTM A709-50 T2 U.N.O.			
1														
2		ONE		M46A	W	16 x 45	16	5 1/8						
3														
4			4	x35b	L	5 x3 1/2 x 3/8	1	1						
5														
6			ONE	x42d	PL	3/8 X 21	1	9 1/4						
7														
8			10	sb7-225	BOLT	7/8 ø		2 1/4		1not/2we	A325			
9			8	sb7-275	BOLT	7/8 ø		2 3/4		1not/2we	A325			
10														
11														
12														
13		ONE		M46B	W	16 x 45	16	5 1/8						
14														
15			4	x35b	L	5 x3 1/2 x 3/8	1	1						
16														
17			ONE	x42d	PL	3/8 X 21	1	9 1/4						
18														
19			10	sb7-225	BOLT	7/8 ø		2 1/4		1not/2we	A325			
20			8	sb7-275	BOLT	7/8 ø		2 3/4		1not/2we	A325			
21														
22														
23														

ALL HOLES TO BE PUNCHED U.N.O.

PAINT NOTES:

1. ALL ITEMS THIS SHEET TO RECEIVE UPPER STEEL PAINT SYSTEM PER GN1.
2. CLEAN AND PRIME BOLTED PARTS PRIOR TO ASSEMBLY.
3. PRIMER ONLY, WITHIN 3" FROM ALL OPEN HOLES, (A307) SHIPPING BOLTS AND NUTS OR TO NEAREST EDGE OR PERPENDICULAR SURFACE (WHICHEVER IS LESS) UNLESS SPECIFICALLY NOTED OTHERWISE.
4. ALL TORQUED BOLTS TO RECEIVE COMPLETE PAINT SYSTEM NOTED. NO PAINT ON (A307) SHIPPING BOLTS AND NUTS.

NOTES:

1. FOR GENERAL NOTES SEE DRAWING GN1.
2. ALL BOLTS THIS SHEET TO BE FULLY TORQUED UNLESS NOTED AS (A307) SHIPPING BOLTS.
3. INSTALL WASHER UNDER HEAD OF BOLT AS WELL AS NUT. ADDITIONAL WASHER IS NOT REQUIRED FOR (A307) SHIPPING BOLTS.
4. ALL HOLES MARKED "⊠" OR "⧓" ARE TO BE FIELD DRILLED HOLES. DO NOT SHOP DRILL.

LEGEND:

℄ = CENTERLINE
CTR'D = CENTERED
C/C = CENTER TO CENTER
FLG = FLANGE
TOP = TOP
BTM = BOTTOM
RDFH = RUNNING DIMENSIONS FROM HERE
= FIELD BOLTS (QUANTITY) DIAMETER x LENGTH
ø = ALTERNATE HOLE DIAMETER
TYP = TYPICAL
N/S = NEAR SIDE
F/S = FAR SIDE
B/S = BOTH SIDES
BTS = BOLT TO SHIP
SHP'G BOLT = SHIPPING BOLT
◇ = SHIPPING BOLT
D.O.R. = DIRECTION OF ROLL
T2 = CHARPY V-NOTCH TESTING REQUIRED
F2 = FRACTURE CRITICAL MATERIAL
⊠ = FIELD DRILLED HOLE
⧓ = FIELD DRILLED HOLE

ALL DIMENSIONS HAVE BEEN FIELD VERIFIED
BY: _____ DATE: _____

☐ NO EXCEPTION TAKEN
☐ REJECTED
☒ MAKE CORRECTIONS NOTED
☐ REVISE AND RESUBMIT
☐ SUBMIT SPECIFIED ITEM

CHECKING IS ONLY FOR GENERAL CONFORMANCE WITH THE DESIGN CONCEPT OF THE PROJECT AND GENERAL COMPLIANCE WITH THE INFORMATION GIVEN IN THE CONTRACT DOCUMENTS. ANY ACTION SHOWN IS SUBJECT TO THE REQUIREMENTS OF THE PLANS AND SPECIFICATIONS. CONTRACTOR IS RESPONSIBLE FOR DIMENSIONS WHICH SHALL BE CONFIRMED AND CORRELATED AT THE JOB SITE; FABRICATION PROCESSES AND TECHNIQUES OF CONSTRUCTION; COORDINATION OF HIS WORK WITH THAT OF ALL OTHER TRADES AND THE SATISFACTORY PERFORMANCE OF THE WORK.

DATE 5/9/12 BY CHA PKT /dl

NO.	DATE	BY	REVISION
A	04/20/12	RC	FOR APPROVAL

STS STEEL, INC.
ENGINEERS • FABRICATORS • ERECTORS
PH: (518) 370-2693 FAX: (518) 370-2696

DRAWING TITLE
UPPER STEEL (U6-U7 & U11-U112)

PROJECT No. US RT 2 BRIDGE No 24		FEDERAL AID No.	
ENGINEER :	CHA		
CUSTOMER :	Harrison & Burrowes Bridge Constructors, Inc.		
PROJECT :	RICHMOND, VT – TRUSS BRIDGE REHAB		
	RICHMOND, VT		
HOLES: 15/16"ø U.N.O.	PAINT: PER SPEC	DATE: 03/16/12	
BOLTS: A325 U.N.O.	DR.BY: RC	JOB NO. 1156	
WELDS: AWS D1.5	CHK.BY: SG	DWG NO. 46	