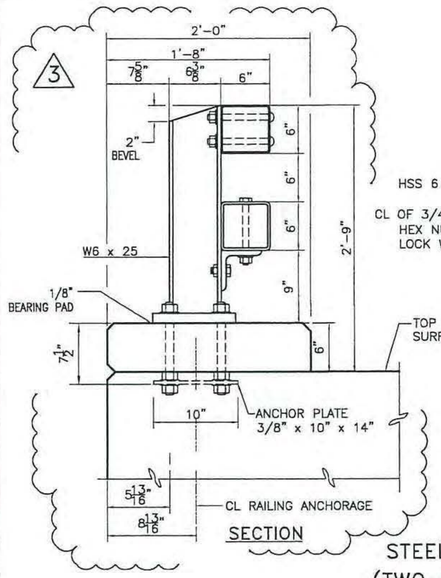

SECTION

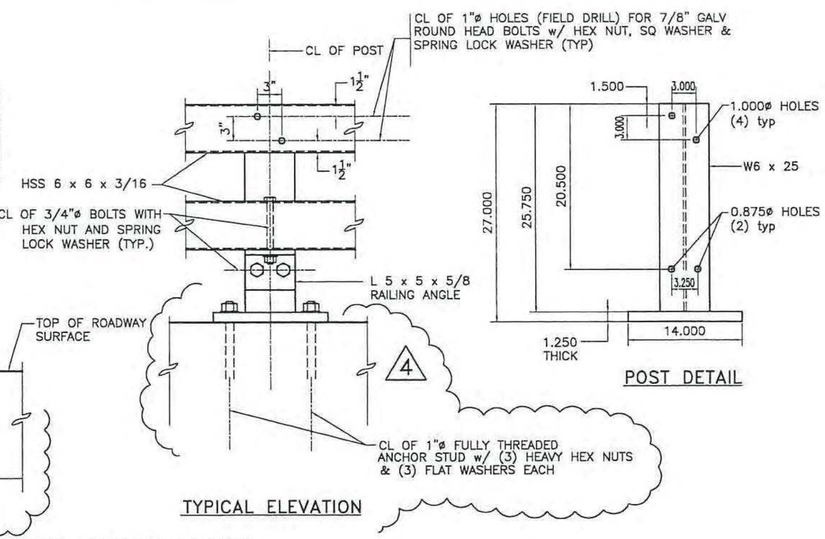

TYPICAL ELEVATION

POST DETAIL

STEEL BRIDGE RAILING
(TWO-RAIL BRUSHCURB)

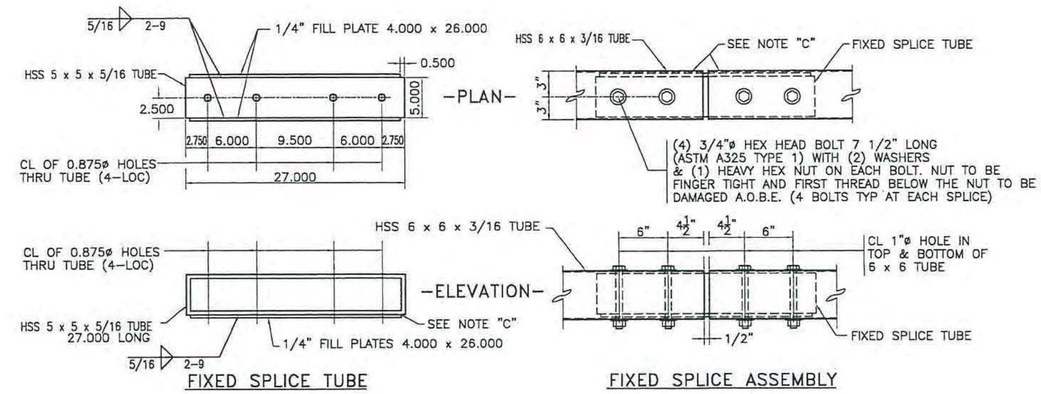

FIXED SPLICE TUBE

FIXED SPLICE ASSEMBLY

SPLICE DETAILS FOR 6" x 6" TUBES

NOTE "C" – PROTRUSIONS CAUSED BY WELDING OR GALVANIZING ARE NOT PERMITTED ON THE ADJOINING SURFACES OF THE BOX BEAM RAILS, SPLICE TUBES, & FILL PLATES.

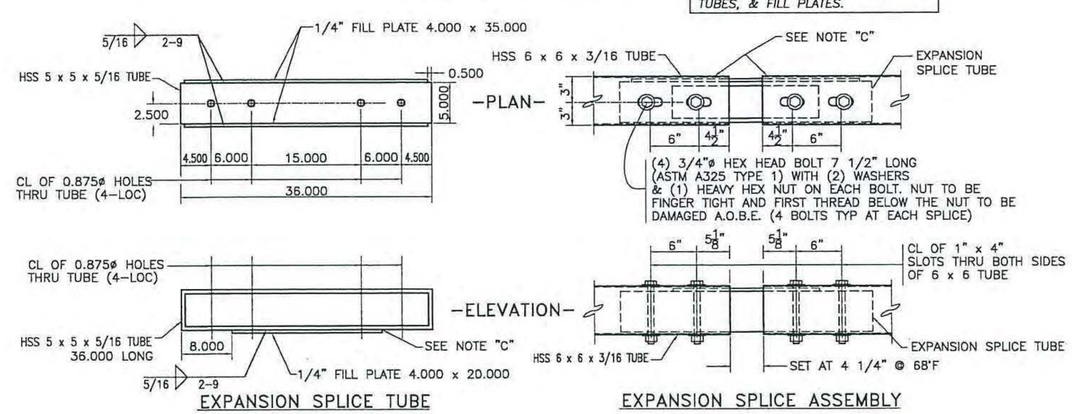

EXPANSION SPLICE TUBE

EXPANSION SPLICE ASSEMBLY

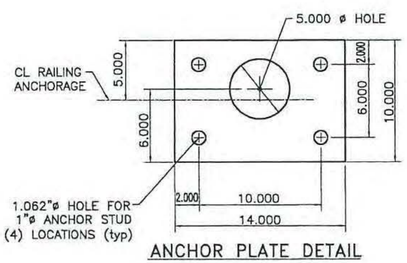

ANCHOR PLATE DETAIL

0.375 x 10.000 x 14.000

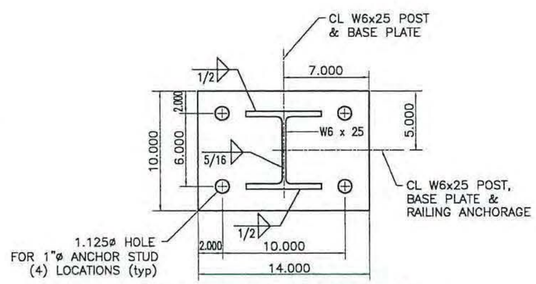

POST SECTION @ BASE PLATE

1.250 x 10.000 x 14.000

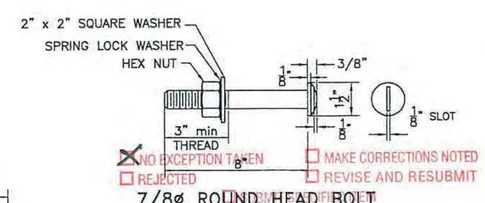

7/8ø ROUND HEAD BOLT

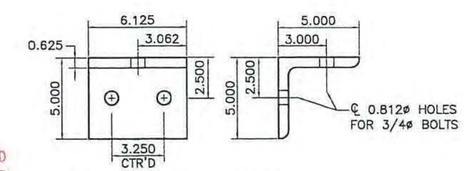

RAILING ANGLE DETAIL

L 5 x 5 x 5/8

NOTES:

1. ALL WORK AND MATERIALS SHALL CONFORM TO SECTION 525.
2. PRIOR TO GALVANIZING, ALL EXPOSED CUT OR SHEARED EDGES SHALL BE ROUNDED TO A 1/16" RADIUS AND BE FREE OF BURRS.
3. ALL POSTS SHALL BE SET NORMAL TO GRADE.
4. SECTIONS OF RAIL TUBE SHALL BE ATTACHED TO A MINIMUM OF TWO (2) RAIL POSTS AND PREFERABLY TO AT LEAST FOUR (4) POSTS.
5. RAIL TUBE EXPANSION JOINT SHALL BE PROVIDED IN ANY RAIL BAY SPANNING THE END OF AN INTEGRAL ABUTMENT BRIDGE AND AT ALL SUPERSTRUCTURE EXPANSION JOINTS. EXPANSION JOINT WIDTH SHALL BE 4-1/4" AT 68°F AND WILL BE ADJUSTED IN THE FIELD BY THE ENGINEER FOR OTHER TEMPERATURES.
6. HOLES IN RAILS FOR RAIL TUBE ATTACHMENT SHALL BE FIELD-DRILLED. HOLES SHALL BE COATED WITH AND APPROVED ZINC-RICH PAINT DURING INSTALLATION.
7. RAIL POST ANCHORING NUTS SHALL BE TIGHTENED TO A SNUG FIT AND GIVEN AN ADDITIONAL ONE-EIGHTH TURN.

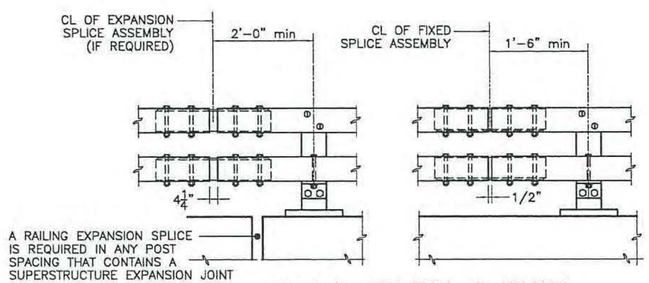

TYPICAL ELEVATION AT SPLICES

☒ NO EXCEPTION TAKEN ☐ MAKE CORRECTIONS NOTED
☐ REJECTED ☐ REVISE AND RESUBMIT

CHECKING IS ONLY FOR GENERAL CONFORMANCE WITH THE DESIGN CONCEPT OF THE PROJECT AND GENERAL COMPLIANCE WITH THE INFORMATION GIVEN IN THE CONTRACT DOCUMENTS. ANY ACTION SHOWN IS SUBJECT TO THE REQUIREMENTS OF THE PLANS AND SPECIFICATIONS. CONTRACTOR IS RESPONSIBLE FOR DIMENSIONS WHICH SHALL BE CONFIRMED AND CORRELATED AT THE JOB SITE; FABRICATION PROCESSES AND TECHNIQUES OF CONSTRUCTION; COORDINATION OF HIS WORK WITH THAT OF ALL OTHER TRADES AND THE SATISFACTORY PERFORMANCE OF THE WORK.

DATE 2/15/13 BY CHA

HIGHWAY SAFETY CORP
GLASTONBURY, CT
860-633-9445

2 RAIL BRIDGE RAILING
RICHMOND, VERMONT
STP-RS 0284(11)

AISC CERTIFIED FABRICATOR

GENERAL CONTRACTOR
SUB CONTRACTOR LAFAYETTE

DRAWN	CHECKED	DATE	SCALE	SIZE
PAR		07-12-12	NONE	D

HSC JOB NO. 1886
SHEET NO. 3 of 6