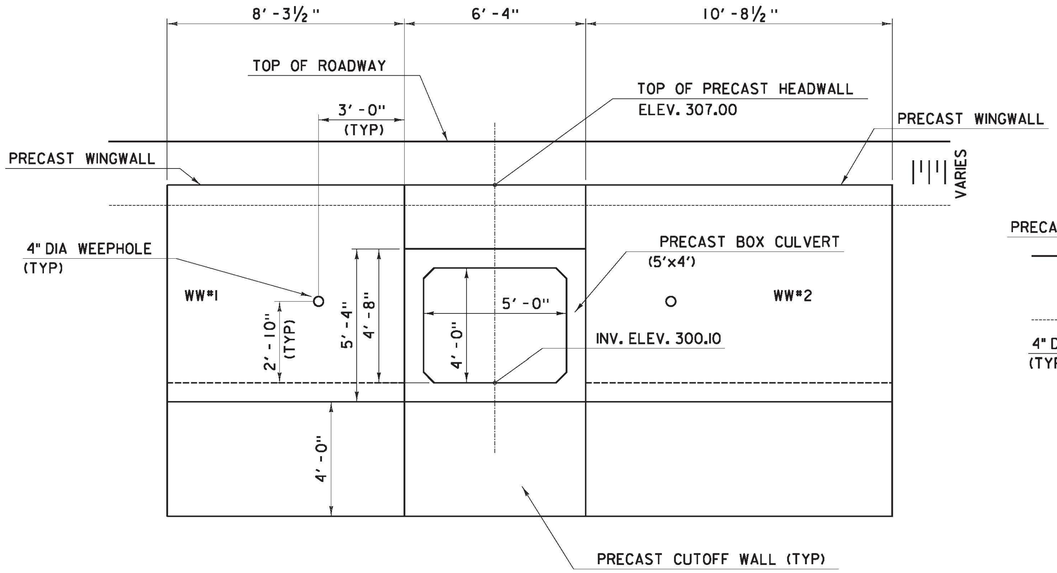

BEGIN BOX CULVERT SECTION
(LOOKING NORTH)
NTS

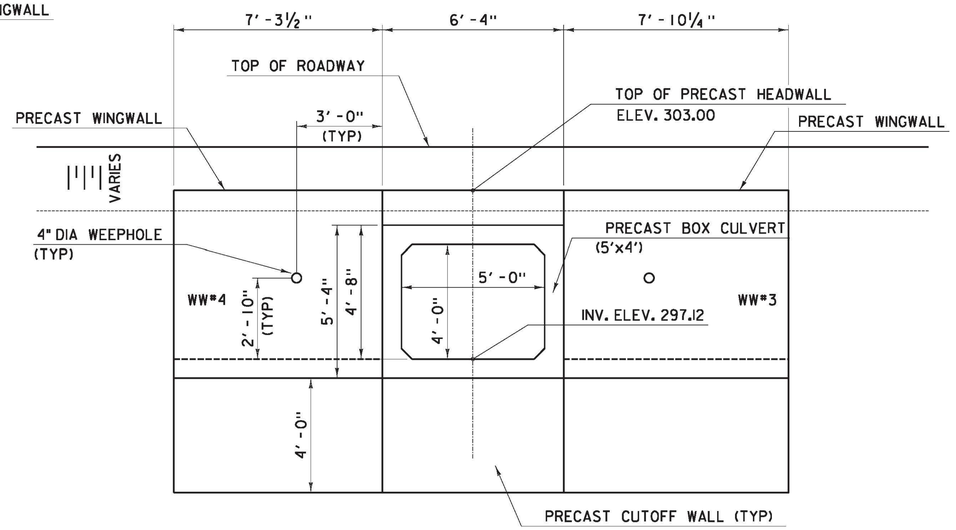

END BOX CULVERT SECTION
(LOOKING SOUTH)
NTS

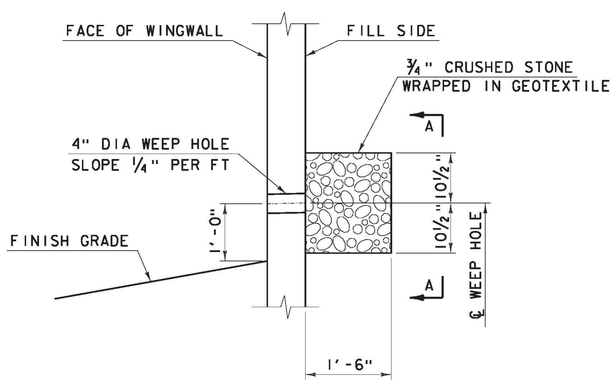

WEEPHOLE DETAIL

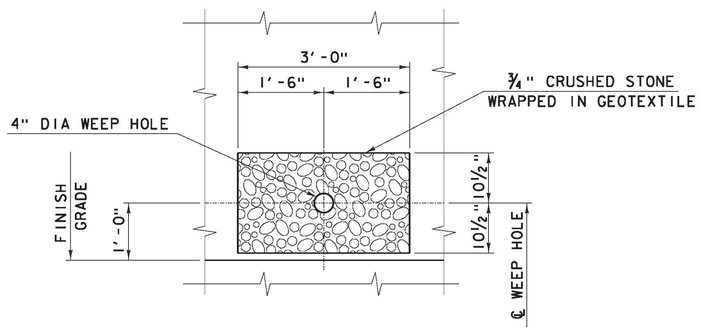

WEEPHOLE DETAIL SECTION A–A

BOX CULVERT SECTIONS (2 OF 2)	PROJECT NAME: RICHMOND PROJECT NUMBER: STP-RS 0284(11)	
	FILE NAME: z90c092 culv-dtl2.dgn PROJECT LEADER: DJV DESIGNED BY: IIJ DWG. NO.: BC3	PLOT DATE: 10/16/2012 DRAWN BY: PKR CHECKED BY: VC/KM SHEET 4 OF 6

FILE NAME = V:\Projects\ANY\K2\22076\CADD_MSTN\BRIDGE WORK\VBS (1-16) BRIDGE DESIGN\z90c092_culv-dtl2.dgn
DATE/TIME = 10/16/2012
USER = 3293