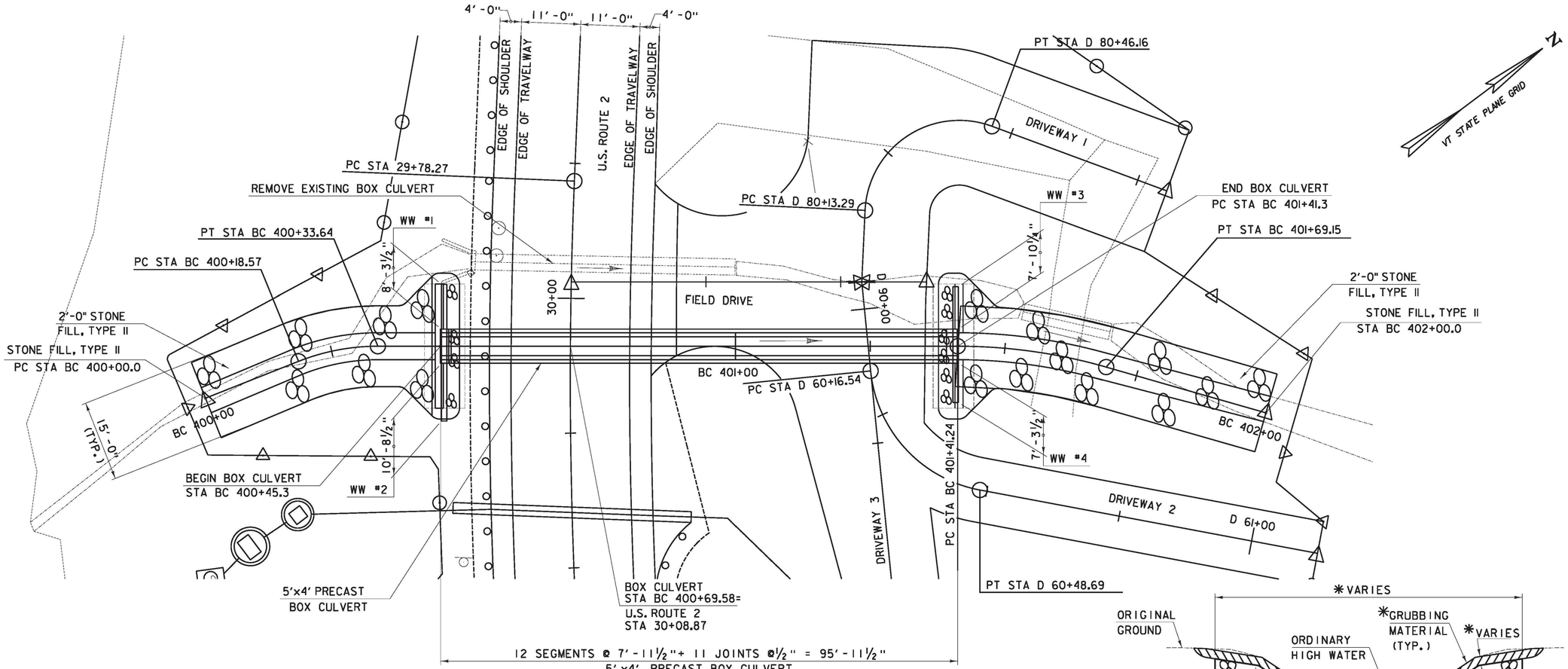

BOX CULVERT PLAN

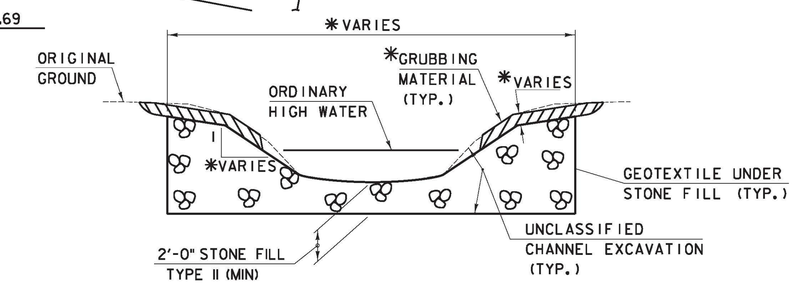

TYPICAL CHANNEL SECTION

*- SEE BOX CHANNEL SECTIONS FOR SLOPES, CHANNEL SECTION LIMITS, AND LOCATIONS OF GRUBBING MATERIAL.

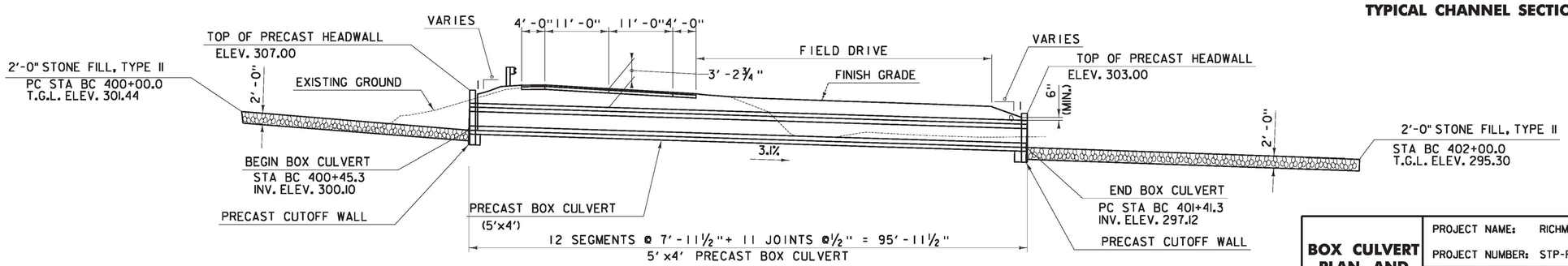

BOX CULVERT ELEVATION

0 10 20
SCALE IN FEET

BOX CULVERT PLAN AND ELEVATION

PROJECT NAME: RICHMOND
PROJECT NUMBER: STP-RS 0284(11)

FILE NAME: z90c092 culv-pln.dgn
PROJECT LEADER: DJV
DESIGNED BY: IIJ/RDH
DWG. NO.: BC1

PLOT DATE: 10/16/2012
DRAWN BY: PKR
CHECKED BY: VC/KM
SHEET 2 OF 6

FILE NAME = V:\Projects\ANY\X2\22076\CADD_MSTN\BRIDGE WORK\BS (1-16) BRIDGE DESIGN\z90c092_culv-pln.dgn
DATE/TIME = 10/16/2012
USER = 3249