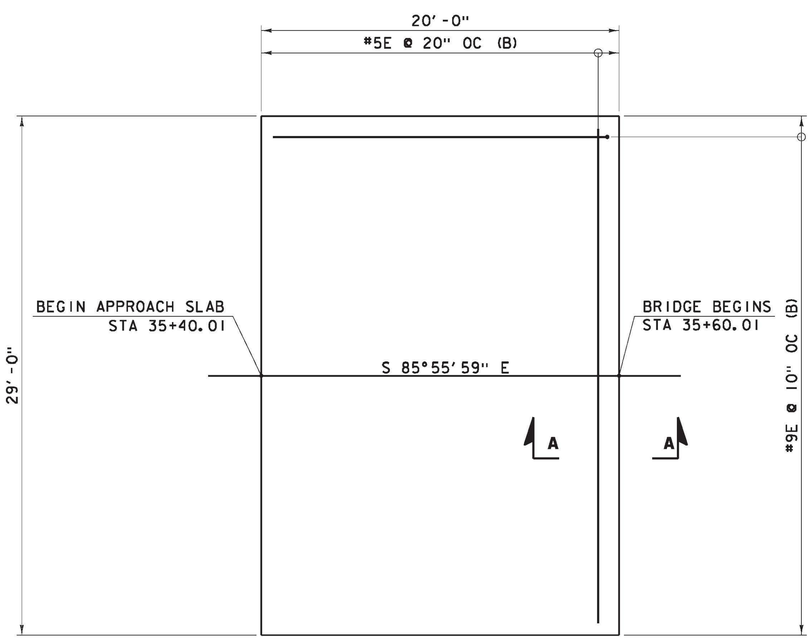


**WEST APPROACH SLAB PLAN**

0 4 8
SCALE IN FEET

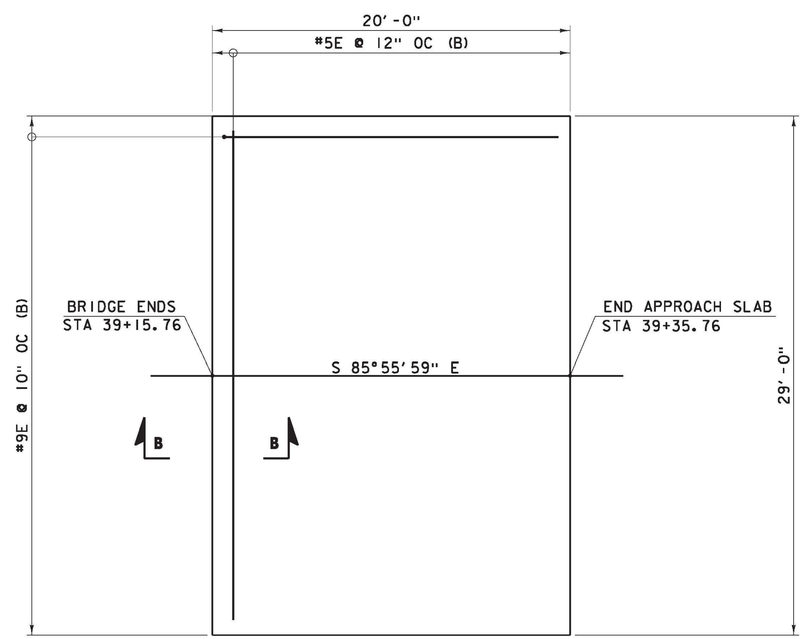


**EAST APPROACH SLAB PLAN**

0 4 8
SCALE IN FEET




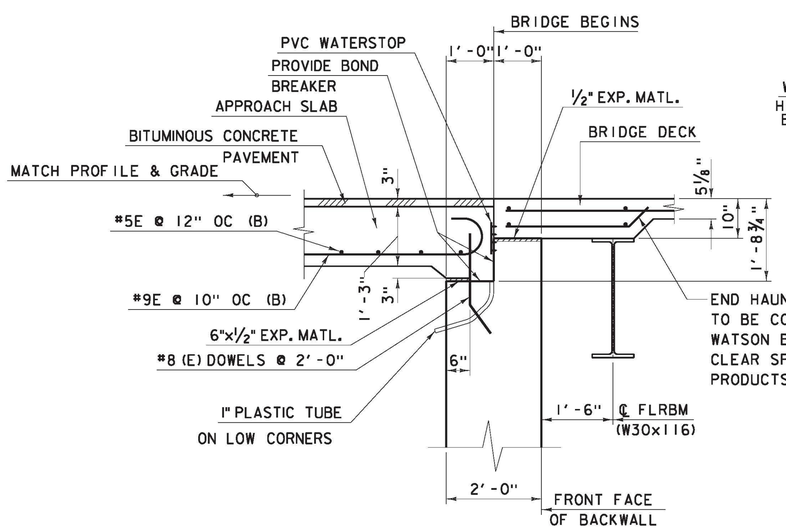


**SECTION A–A**
**WEST ABUTMENT**

0 1.5 3
SCALE IN FEET

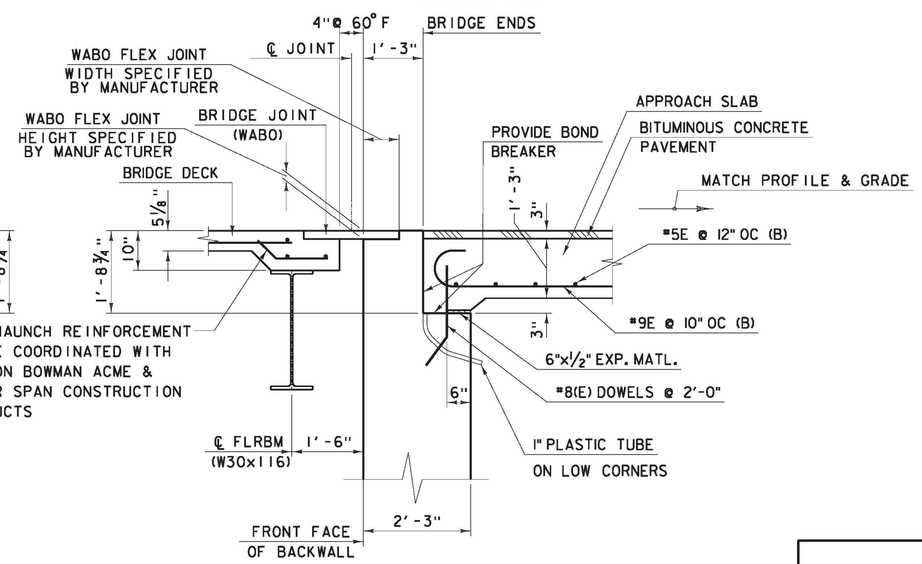


**SECTION B–B**
**EAST ABUTMENT**

0 1.5 3
SCALE IN FEET

| | | |
|---|---|---|
| **APPROACH SLAB PLAN AND SECTIONS** | PROJECT NAME: RICHMOND | |
| | PROJECT NUMBER: STP-RS 0284(11) | |
| | FILE NAME: z90c092 abt jnt sec.dgn<br>PROJECT LEADER: DJV<br>DESIGNED BY: DJV<br>DWG. NO.: A1 | PLOT DATE: 3/14/2013<br>DRAWN BY: PKR<br>CHECKED BY: VC/KM<br>SHEET 9 OF 10 |

FILE NAME = V:\Projects\ANY\K2\22076\CADD_MSTN\BRIDGE WORK\WBS (1-16) BRIDGE DESIGN\z90c092_abt_jnt_sec.dgn
DATE/TIME = 3/14/2013
USER = 3213