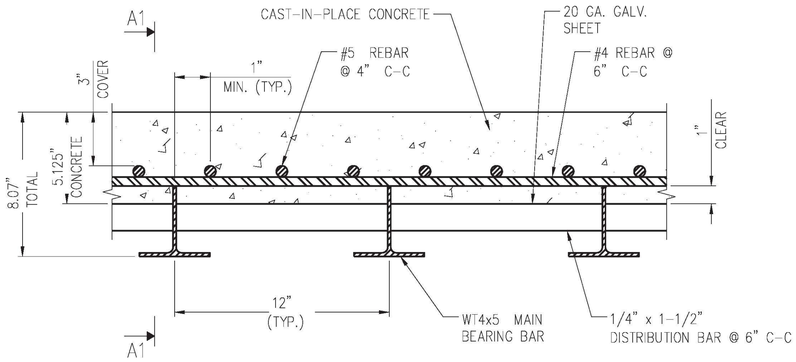

TYPICAL SECTION THROUGH DECK
(N.T.S.)

REBAR LAYOUT SHALL BE AS SHOWN IN ORDER TO PERMIT THE MAXIMUM AMOUNT OF ROOM FOR ATTACHMENT OF SHEAR STUDS TO STRINGERS AND ADJUSTMENT OF LEVELING BOLTS. ALL REBAR SHALL BE GALVANIZED OR EPOXY COATED.

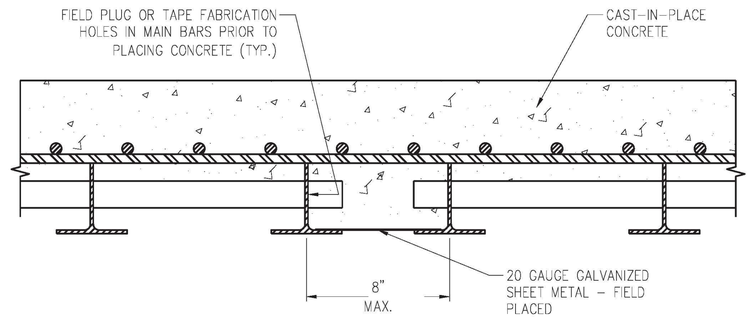

TYPICAL CONNECTION BETWEEN PANELS
(N.T.S.)

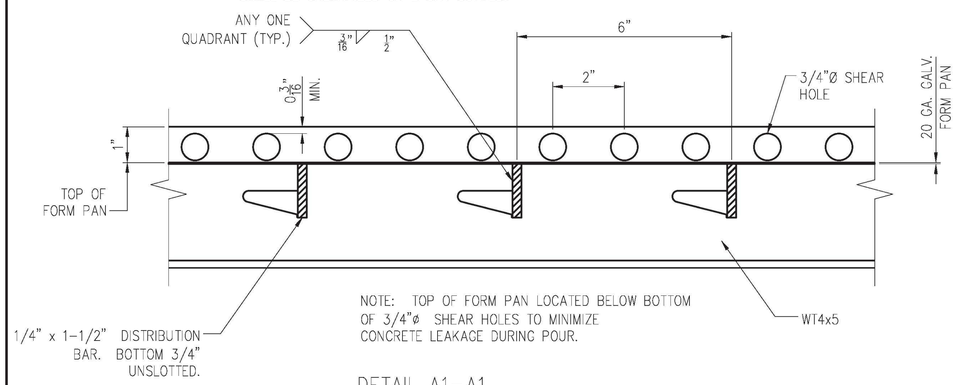

NOTE: TOP OF FORM PAN LOCATED BELOW BOTTOM OF 3/4"ø SHEAR HOLES TO MINIMIZE CONCRETE LEAKAGE DURING POUR.

DETAIL A1-A1
(FABRICATION DETAILS)
(N.T.S.)

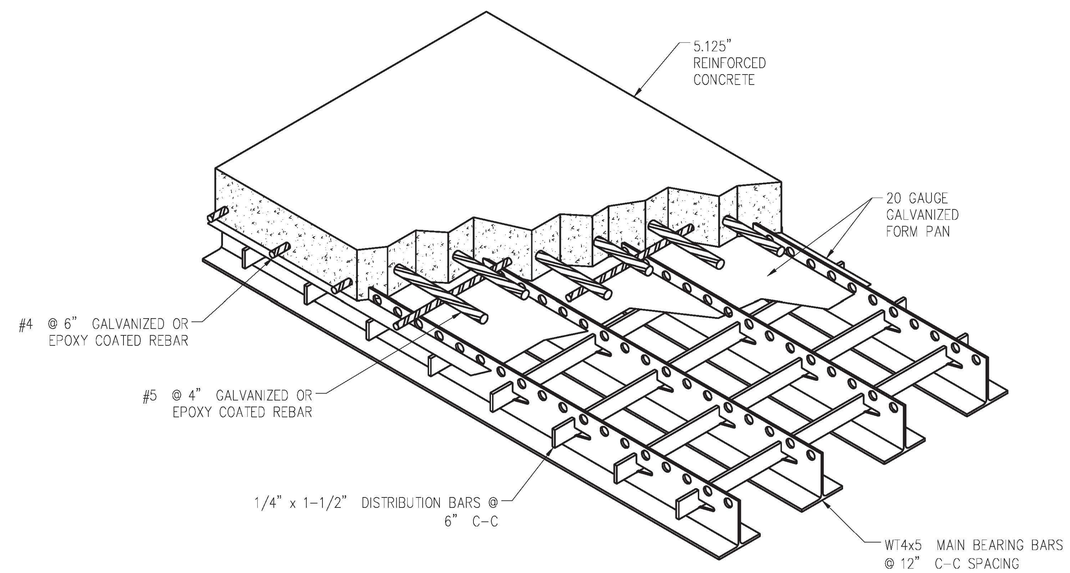

EXODERMIC BRIDGE DECK
(N.T.S.)

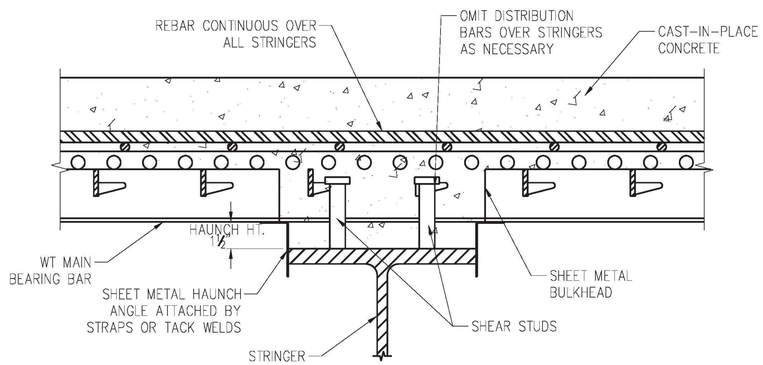

SECTION OVER STRINGER
(N.T.S.)

LEVELING BOLTS NOT SHOWN

OTHER HAUNCH FORMING OPTIONS POSSIBLE

OMIT DISTRIBUTION BARS OVER STRINGERS AS NECESSARY TO PROVIDE CLEARANCE FOR SHEAR STUDS AND LEVELING BOLTS

FOR HAUNCH HEIGHTS LESS THAN 1.5", PLACE HIGH STRENGTH POURABLE GROUT UP TO THE BOTTOM OF THE WT MAIN BAR PRIOR TO POURING CONCRETE

BRIDGE DECK DETAILS	PROJECT NAME: RICHMOND	
	PROJECT NUMBER: STP-RS 0284(11)	
	FILE NAME: z90c092 slb dt101.dgn	PLOT DATE: 3/14/2013
	PROJECT LEADER: VNC	DRAWN BY: PKR
	DESIGNED BY: DJV	CHECKED BY: DJV
	DWG. NO.: D1	SHEET 8 OF 10

FILE NAME = V:\Projects\ANY\K2\22076\CADD_MSTN\BRIDGE WORK\WBS (1-16) BRIDGE DESIGN\z90c092_slb_dt1.01.dgn
DATE/TIME = 3/14/2013
USER = 3213