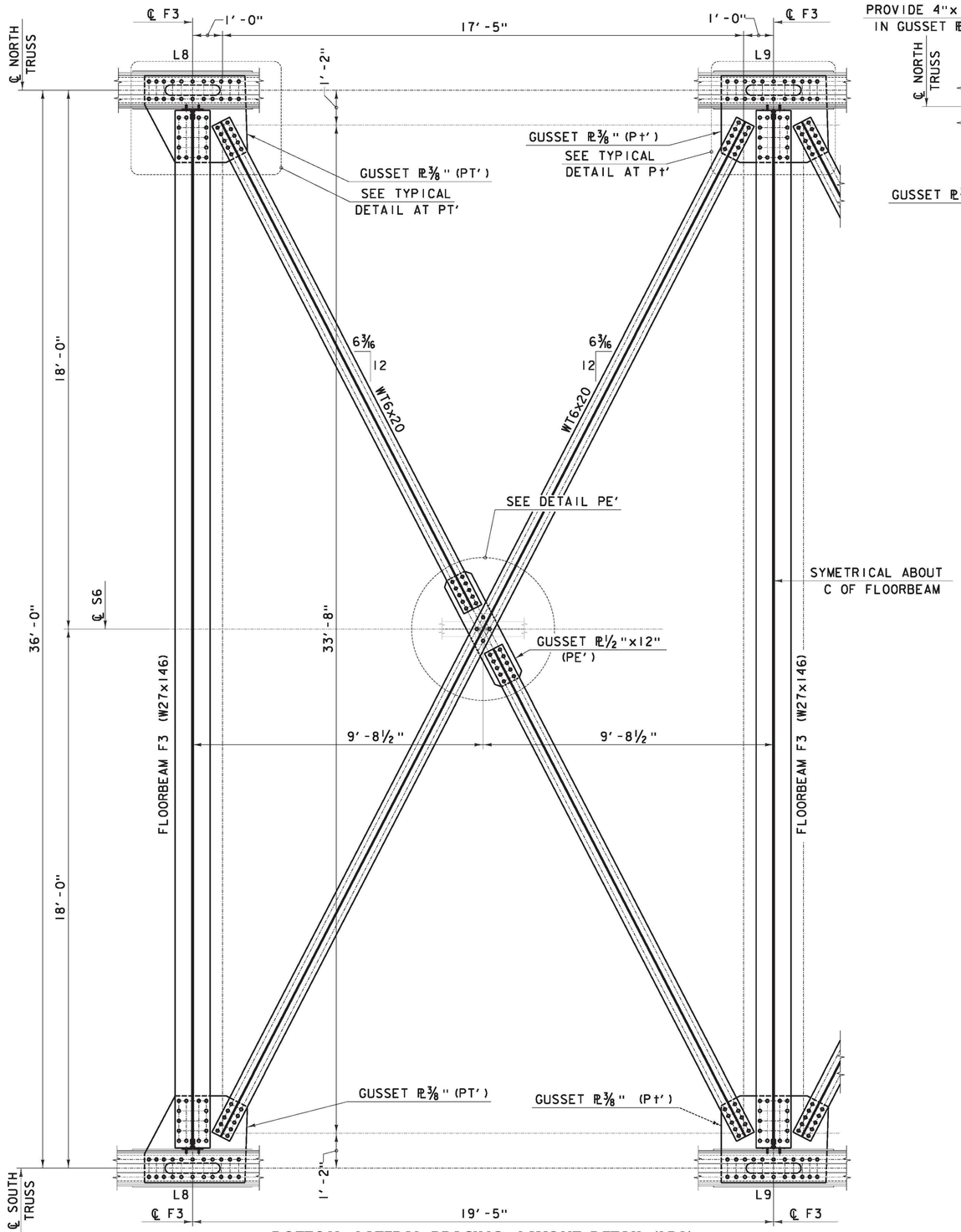

BOTTOM LATERAL BRACING LAYOUT DETAIL (LB2)

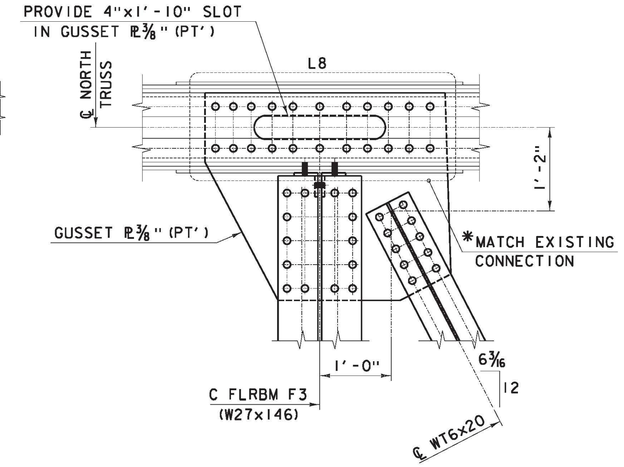

TYPICAL DETAIL AT PT'

0 1 2
SCALE 1" = 1'-0"

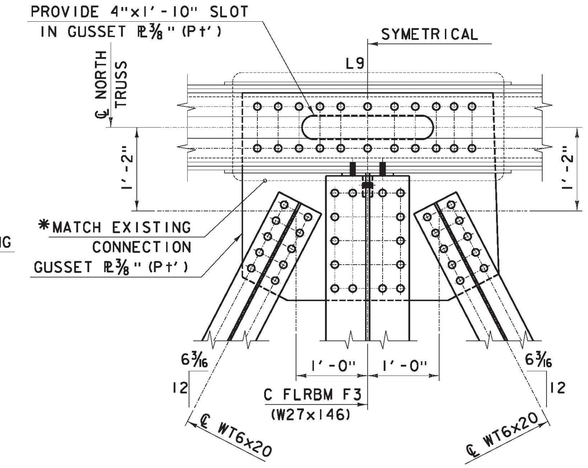

TYPICAL DETAIL AT Pt'

0 1 2
SCALE 1" = 1'-0"

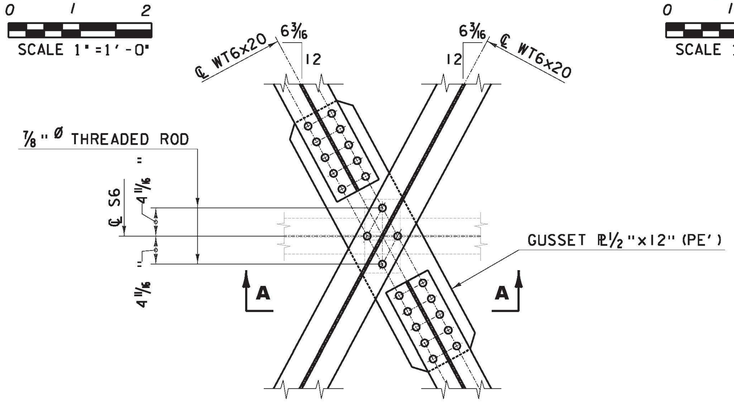

TYPICAL DETAIL AT PE'

0 1 2
SCALE 1" = 1'-0"

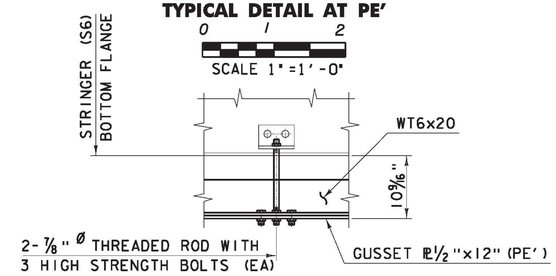

SECTION A–A

NOTES:

1. FOR FRAMING PLAN AND SECTIONS, SEE DWG NO ST1.
2. FOR ADDITIONAL INFORMATION, SEE SHEET E1,8,10 & 13a FROM THE 1929 FABRICATION DRAWINGS.
3. MEMBER DESIGNATIONS TAKEN FROM 1929 FABRICATION DRAWINGS

* -SEE CONNECTION INSTALLATION METHODS

"A'" = NEW MEMBER DESIGNATION.

0 2 4
SCALE 1/2" = 1'-0" (UON)

BOTTOM LATERAL BRACING DETAILS (LB2)	PROJECT NAME: RICHMOND
	PROJECT NUMBER: STP-RS 0284(11)
FILE NAME: z90c092_bott_lat_dtl_01.dgn	PLOT DATE: 3/14/2013
PROJECT LEADER: DJV	DRAWN BY: PKR
DESIGNED BY: RH	CHECKED BY: VC/KM
DWG. NO.: ST21	SHEET X OF X

FILE NAME = V:\Projects\ANY\K2\22076\CADD_MSTN\BRIDGE WORK\DGS (1-16) BRIDGE DESIGN\z90c092_bott_lat_dtl_02.dgn
DATE/TIME = 3/14/2013
USER = 3243