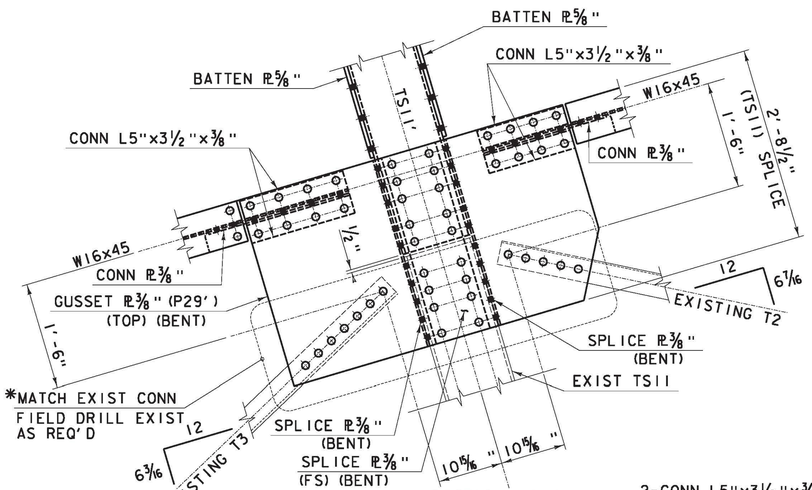

SECTION A–A

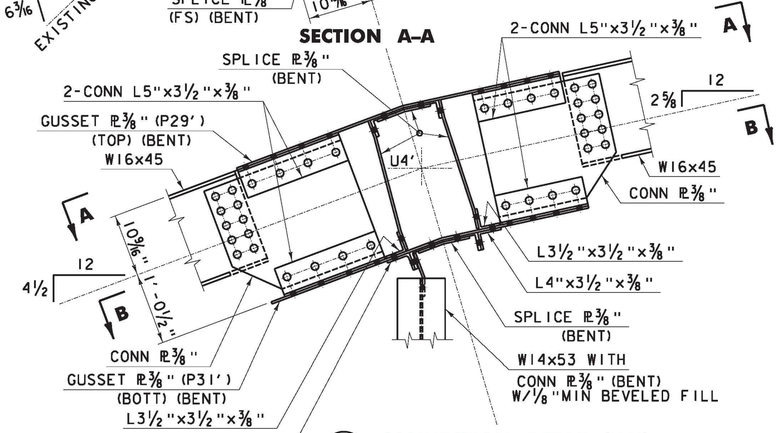

A ST9 CONNECTION DETAIL (U4')
(SHOWN IN POSITION)

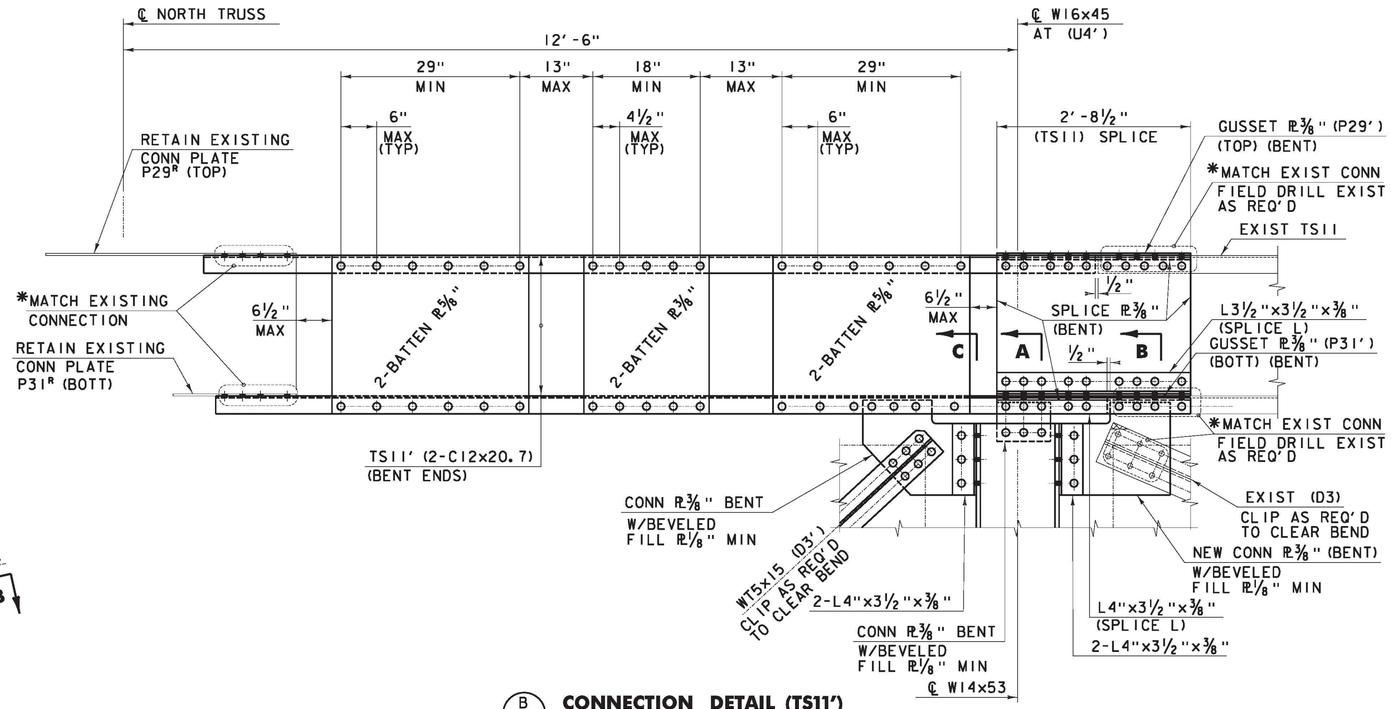

B ST9 CONNECTION DETAIL (TS11')

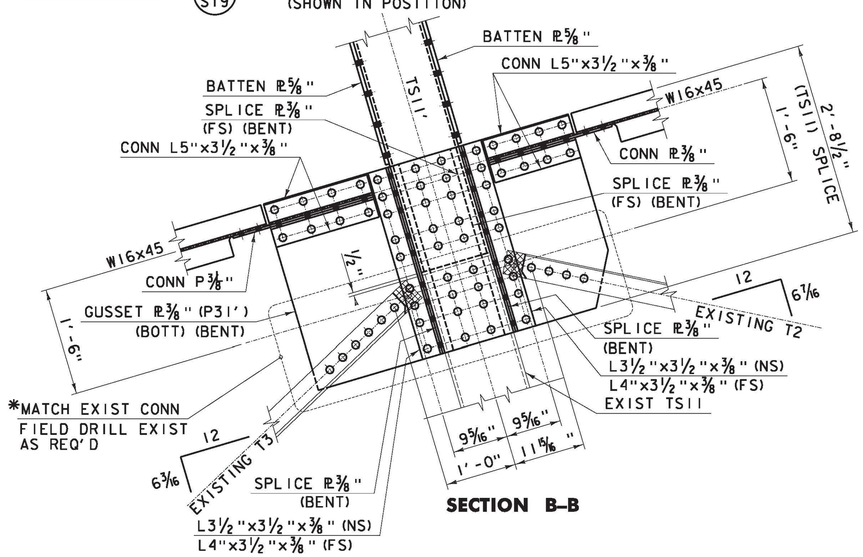

SECTION B–B

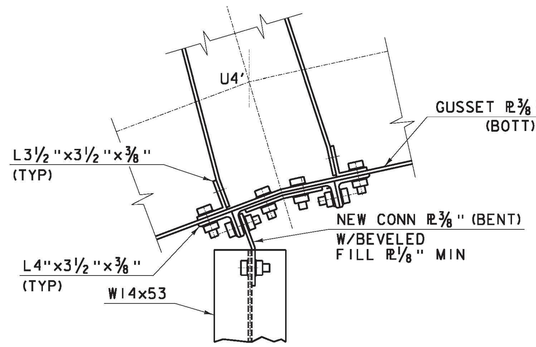

SECTION A

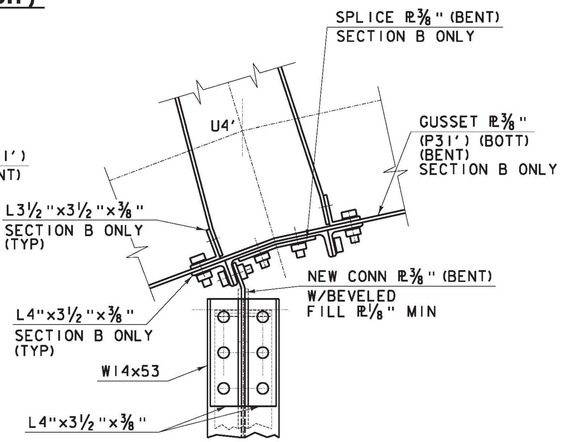

SECTION B (AS SHOWN)
SECTION C (SIMILAR)

NOTES:

1. FOR FRAMING PLAN AND SECTIONS, SEE DWG NO ST1 & ST9.
2. FOR ADDITIONAL INFORMATION, SEE SHEET E1,1,2,7,11,16,19 & 20 FROM THE 1929 FABRICATION DRAWINGS.
3. MEMBER DESIGNATIONS TAKEN FROM 1929 FABRICATION DRAWINGS.

* -SEE CONNECTION INSTALLATION METHODS, DWG S2.

▨ -PARTIAL REMOVAL OF EXISTING MEMBER. REMOVE EXISTING MEMBER AS SHOWN, CLIP AS REQUIRED.

0 1 2
SCALE 1" = 1'-0"

CONNECTION DETAIL AT U4'	PROJECT NAME: RICHMOND	
	PROJECT NUMBER: STP-RS 0284(11)	
	FILE NAME: 02A014.dgn	PLOT DATE: 3/14/2013
	PROJECT LEADER: DJV	DRAWN BY: PKR
	DESIGNED BY: RH	CHECKED BY: VC/KM
	DWG. NO.: ST10	SHEET X OF X

FILE NAME = V:\Projects\ANY\K2\22076\CADD_MSTN\BRIDGE WORK\WBS (1-16) BRIDGE DESIGN\e90c892_top_1ex_dt1_01A.dgn
DATE/TIME = 3/14/2013
USER = 5243