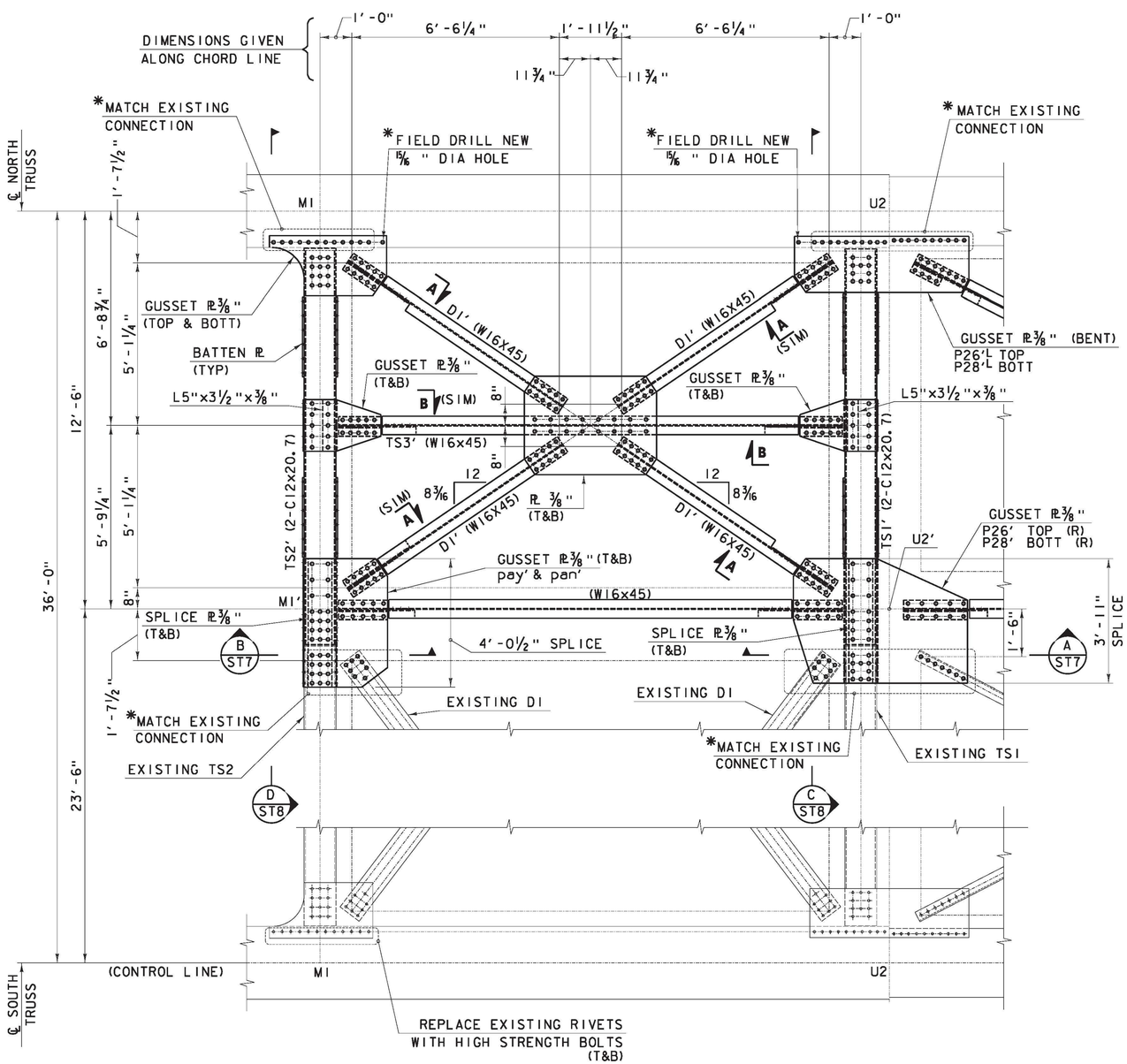

END PORTAL DETAIL AT LOCATION M1 TO U2 (AS SHOWN)
LOCATION M17 TO U16 (OPPOSITE HAND)

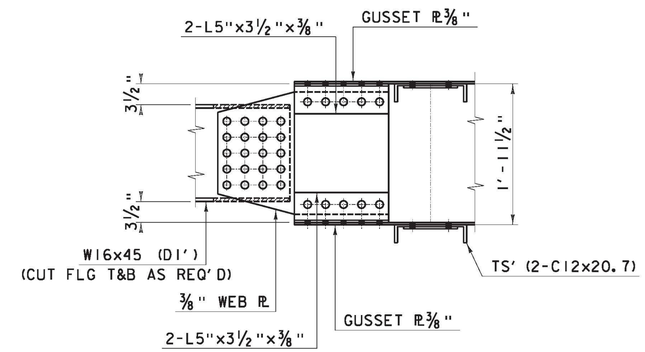

SECTION A
(TYPICAL CONNECTION DETAIL)

0 1 2
SCALE 1" = 1'-0"

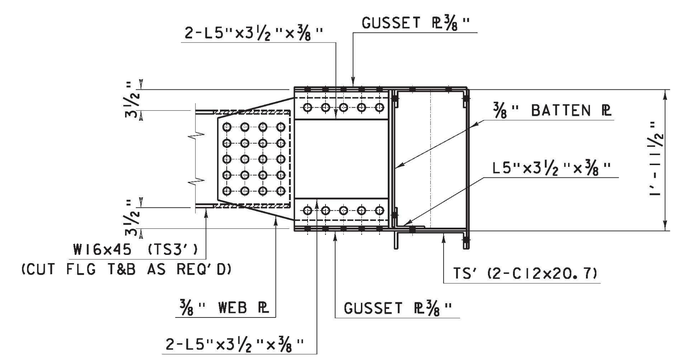

SECTION B
(TYPICAL CONNECTION DETAIL)

0 1 2
SCALE 1" = 1'-0"

NOTES:

1. FOR FRAMING PLAN AND SECTIONS, SEE DWG NO ST1, ST7 & ST8.
2. FOR ADDITIONAL INFORMATION, SEE SHEET E1, 2, 17a, 17b & 19 FROM THE 1929 FABRICATION DRAWINGS.
3. MEMBER DESIGNATIONS TAKEN FROM 1929 FABRICATION DRAWINGS

* -SEE CONNECTION INSTALLATION METHODS

"A'" = NEW JOINT NUMBER OR NEW MEMBER DESIGNATION.

0 2 4
SCALE ½" = 1'-0" (UON)

END PORTAL DETAILS	PROJECT NAME: RICHMOND	
	PROJECT NUMBER: STP-RS 0284(11)	
	FILE NAME: z90c092_port_dtl_03.dgn	PLOT DATE: 3/14/2013
	PROJECT LEADER: DJV	DRAWN BY: PKR
	DESIGNED BY: RH	CHECKED BY: VC/KM
	DWG. NO.: ST6	SHEET X OF X

FILE NAME = V:\Projects\ANY\K2\22076\CADD_MSTN\BRIDGE WORK\MBS (1-16) BRIDGE DESIGN\z90c092_port_dtl_03.dgn
DATE/TIME = 3/14/2013
USER = 3293