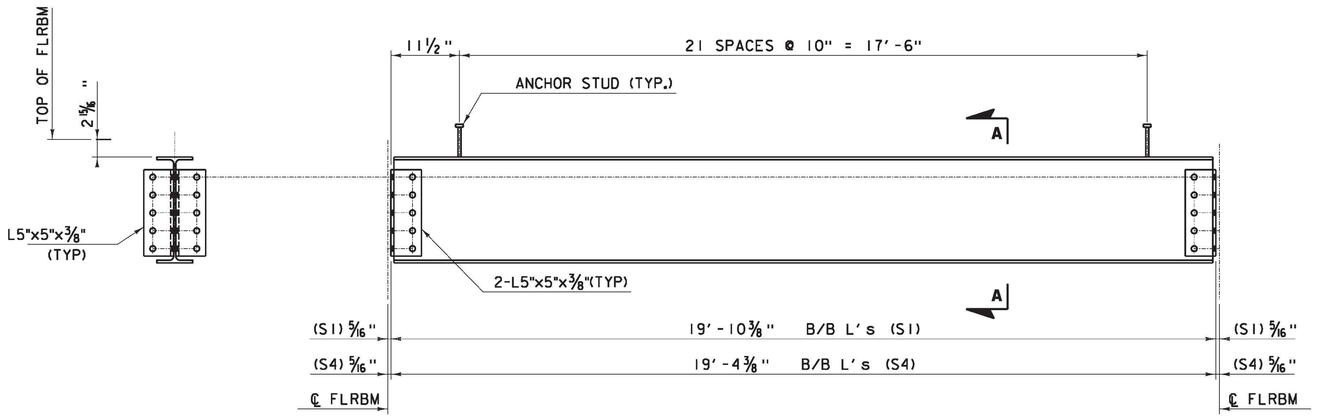

STRINGER DETAIL TYPE S1 & S4 (W18x35)

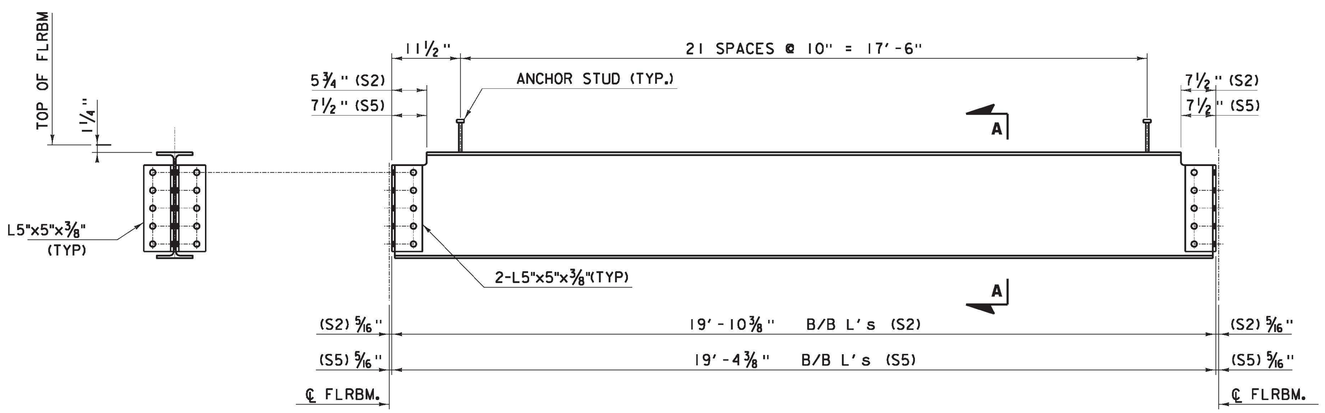

STRINGER DETAIL TYPE S2 & S5 (W18x35)

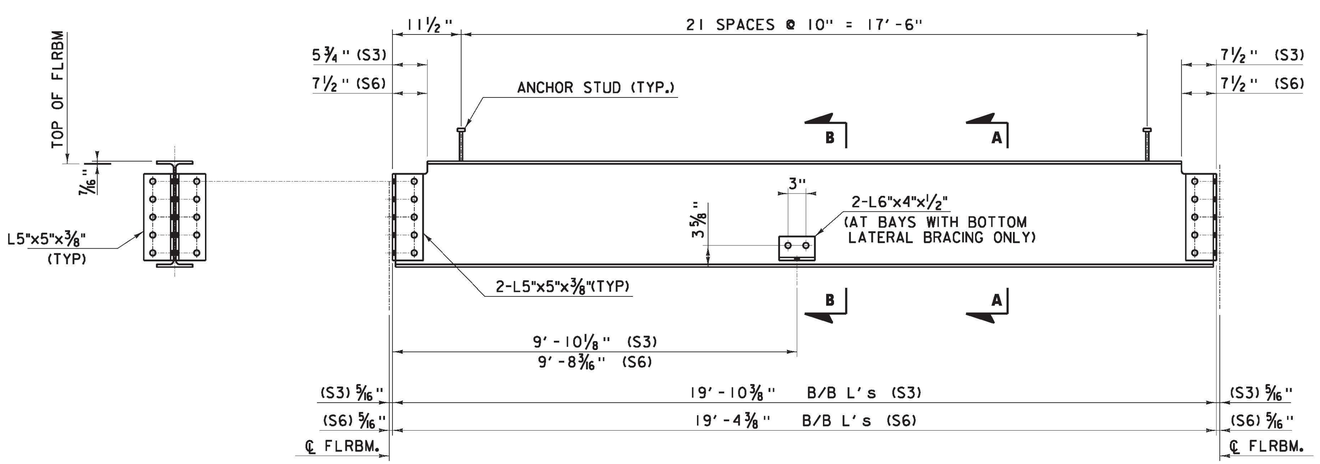

STRINGER DETAIL TYPE S3 & S6 (W18x35)

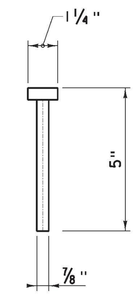

STUD DETAIL

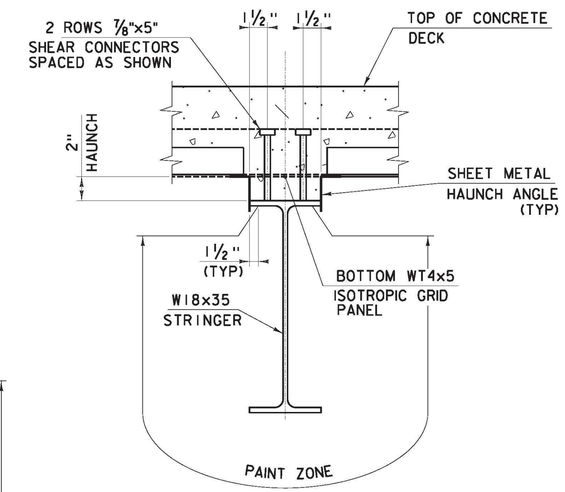

SECTION A–A

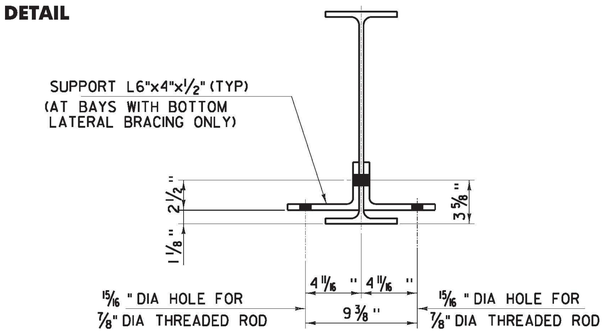

SECTION B–B

DEFLECTION TABLE	
MEMBER	DEFLECTION
EXTERIOR STRINGER	1/16"
INTERIOR STRINGER	1/8"

NOTE:
DEFLECTIONS TAKEN AT MIDPOINT OF MEMBER, DECK + SUPERIMPOSED DEAD LOAD ONLY.

NOTES:

1. FABRICATE STRINGERS WITH NATURAL MILL CAMBER UP.

STRINGER DETAILS	PROJECT NAME: RICHMOND PROJECT NUMBER: STP-RS 0284(11)	
	FILE NAME: z90c092 strgr dtl 01.dgn PROJECT LEADER: DJV DESIGNED BY: CTA/DJV DWG. NO.: ST3	PLOT DATE: 3/14/2013 DRAWN BY: PKR CHECKED BY: VC/KM SHEET X OF X

FILE NAME = V:\Projects\ANY\V2\22076\CADD_MSTN\BRIDGE WORK\WBS (1-16) BRIDGE DESIGN\z90c092_strgr_dtl01.dgn
DATE/TIME = 3/14/2013
USER = 3213