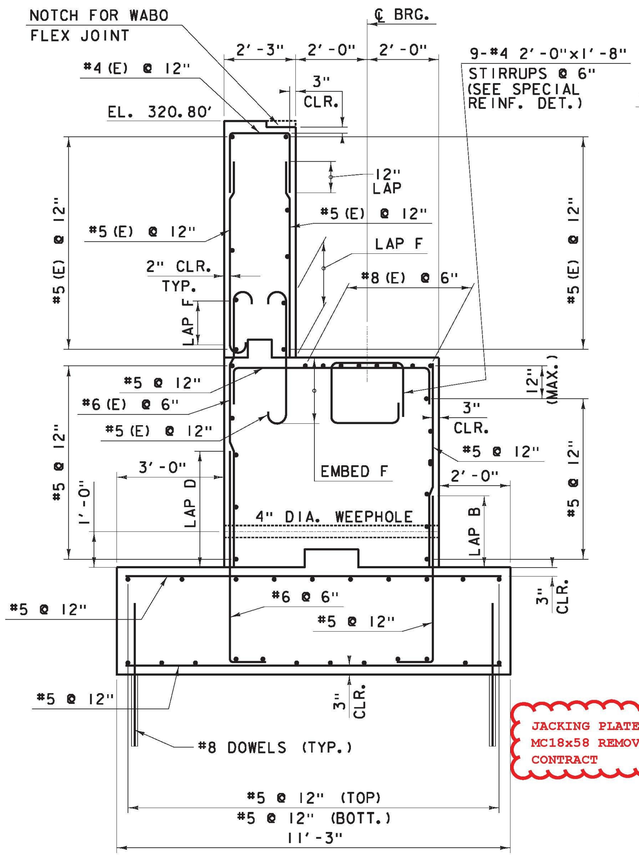

EAST ABUTMENT SECTION 1

✳ - SEE EAST ABUTMENT ELEVATION, DWG EA1

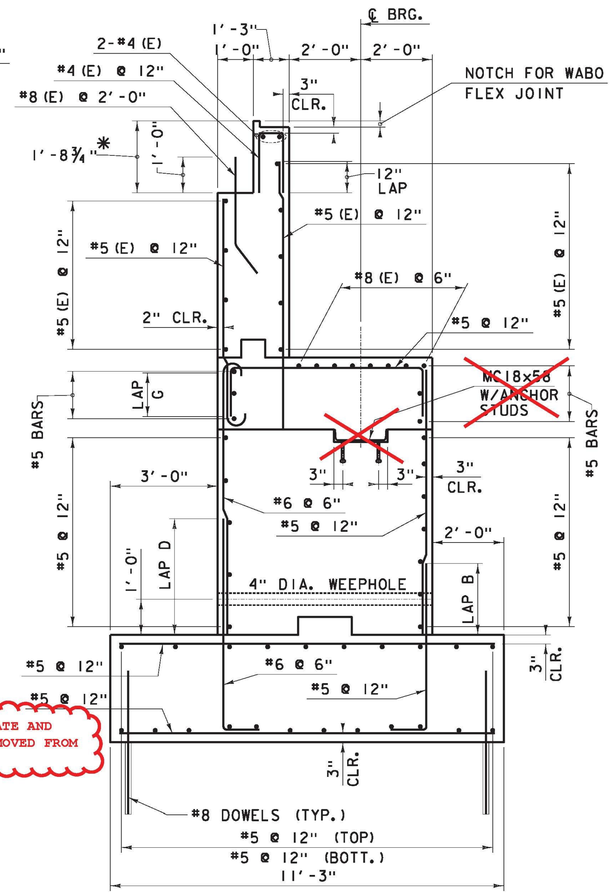

JACKING PLATE AND MC18x58 REMOVED FROM CONTRACT

EAST ABUTMENT SECTION 2

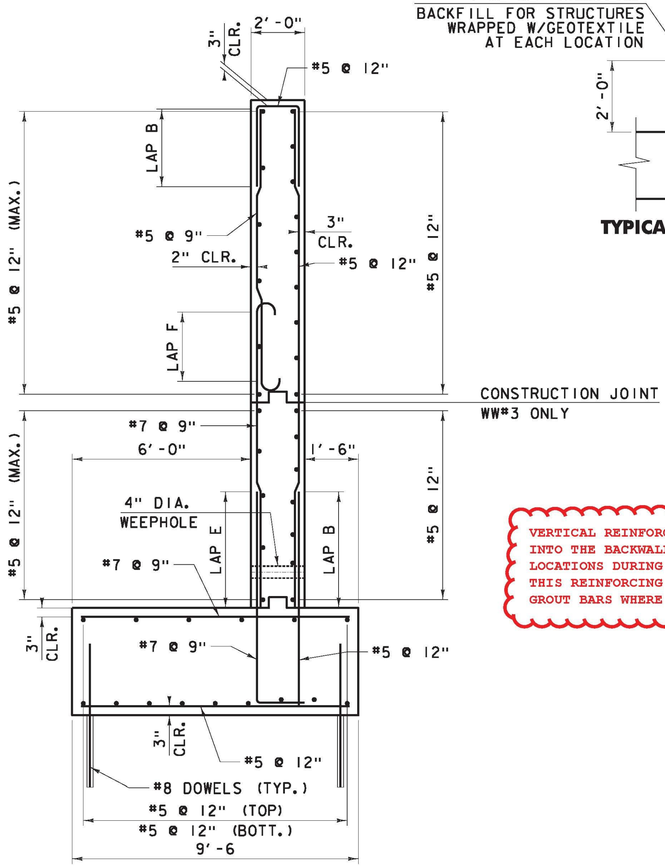

VERTICAL REINFORCING FROM THE STEM INTO THE BACKWALL WAS REMOVED IN VARIOUS LOCATIONS DURING TRUSS WIDENING OPERATIONS. THIS REINFORCING WAS REPLACED WITH DRILL & GROUT BARS WHERE APPLICABLE.

TYPICAL EAST ABUTMENT WINGWALL SECTION (WW#3 & WW#4)

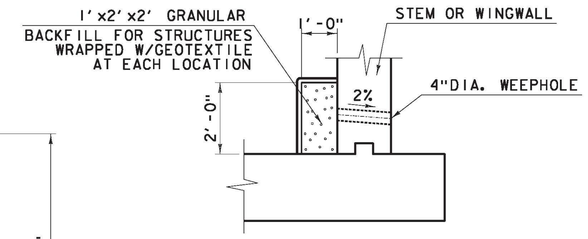

TYPICAL WEEPHOLE SECTION

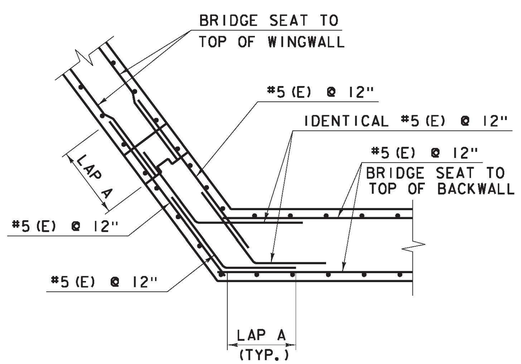

WINGWALL CORNER SECTION (ABOVE BRIDGE SEAT)

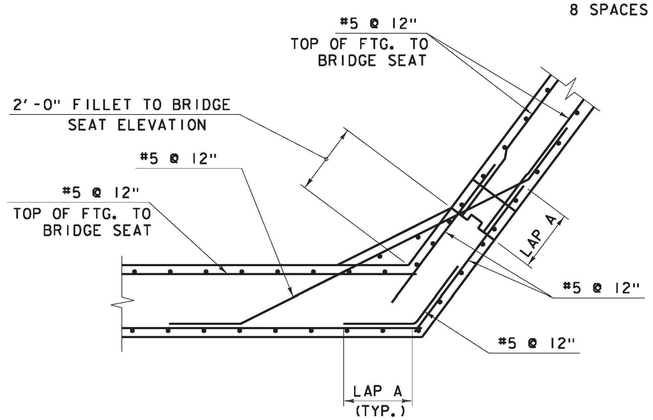

WINGWALL CORNER SECTION (BELOW BRIDGE SEAT)

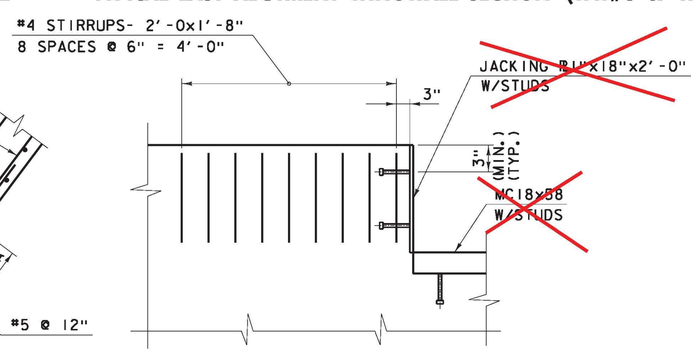

SPECIAL REINFORCING DETAIL

NOTES:

LAP "A" SHALL BE USED FOR ALL #5 HORIZONTAL BARS, BOTH BLACK AND EPOXY COATED.

COVER FOR STEEL REINFORCEMENT SHALL BE 3" UNLESS OTHERWISE NOTED

LAP/EMBEDMENT LENGTH TABLE	
LAP	LENGTH
A	2'-0"
B	2'-0"
C	2'-2"
D	2'-7"
E	3'-7"
F	2'-0"
G	1'-8"

0 2 4
SCALE IN FEET

EAST ABUTMENT REINFORCEMENT DETAILS

PROJECT NAME: RICHMOND
PROJECT NUMBER: STP-RS 0284(11)

FILE NAME: z90c092 abt rnf 04.dgn
PROJECT LEADER: DJV
DESIGNED BY: DJV
DWG. NO.: EA3

PLOT DATE: 3/14/2013
DRAWN BY: PKR
CHECKED BY: VC/KM
SHEET 7 OF 10

FILE NAME = V:\Projects\VAN\K2\22076\CADD_MSTN\BRIDGE WORK\BBS (1-16) BRIDGE DESIGN\z90c092_abt_rnf_04.dgn
DATE/TIME = 3/14/2013
USER = 3243