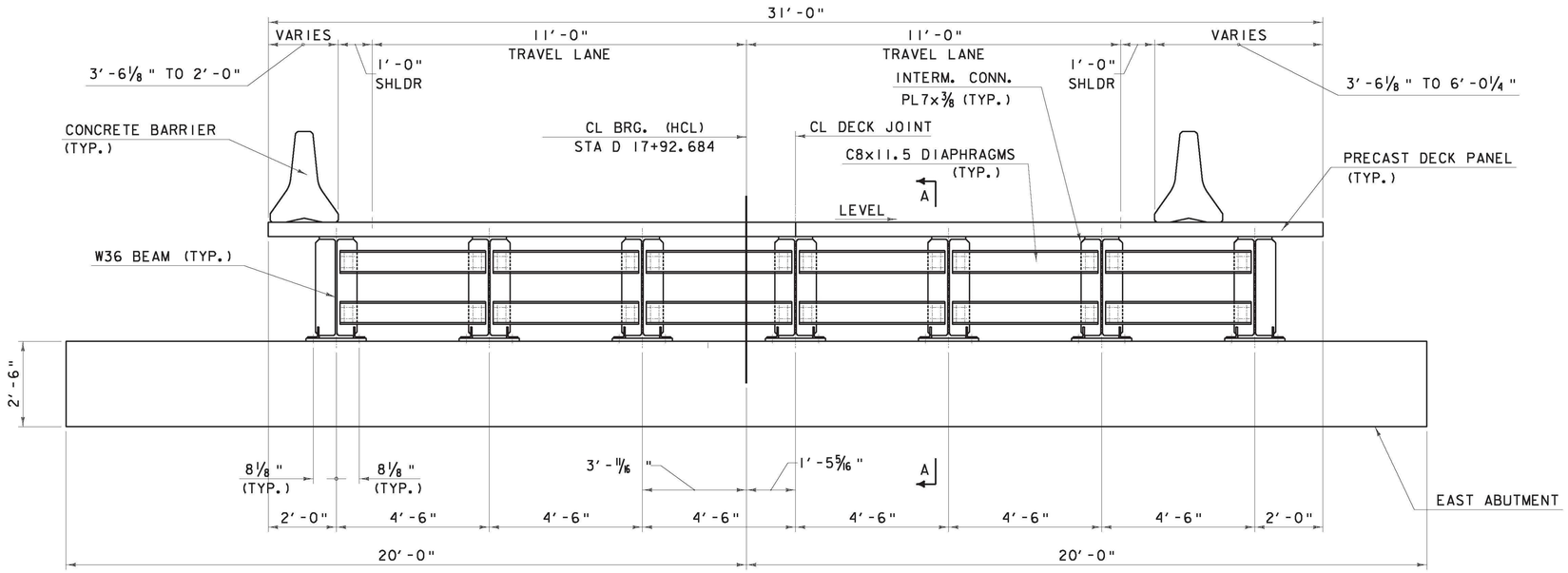

SPAN 3 SECTION AT EAST ABUTMENT (LOOKING UPSTATION)

0 2 10
SCALE IN FEET

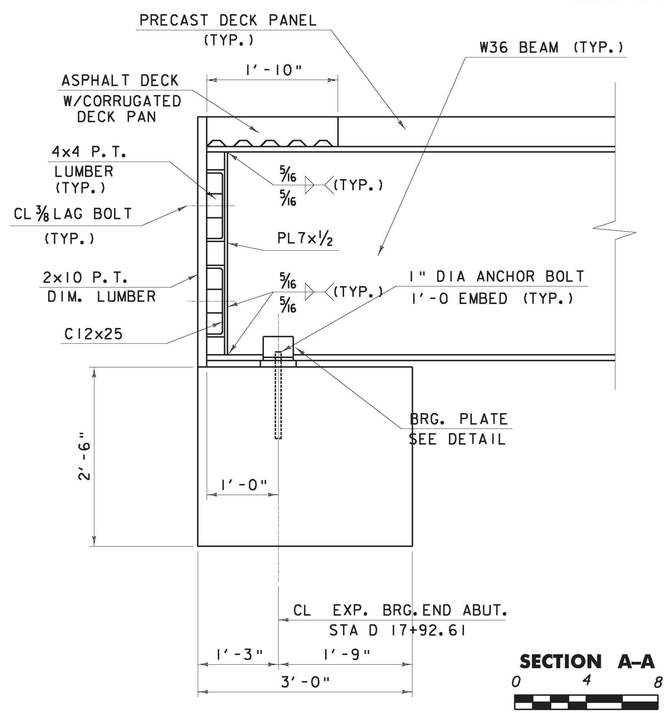

SECTION A-A

0 4 8
SCALE IN FEET

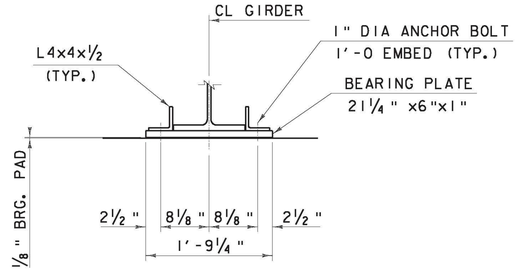

TYPICAL BEARING PLATE ELEVATION

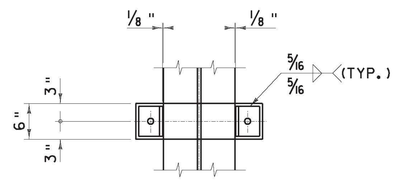

TYPICAL BEARING PLATE SECTION

SPAN 3 SECTION AT EAST ABUTMENT	PROJECT NAME: RICHMOND	
	PROJECT NUMBER: STP-RS 0284(11)	
	FILE NAME: 02A014.dgn PROJECT LEADER: DJV DESIGNED BY: DJV DWG. NO.: 16	PLOT DATE: 6/1/2011 DRAWN BY: PKR CHECKED BY: VC/KM SHEET 16 OF XX

FILE NAME = v:\projects\any\k2\22076\cadd_msn\bridge work\wbs (1-15) temporary bridge\k98c092_TMP_SEC.dgn
DATE/TIME = 6/1/2011
USER = 5273