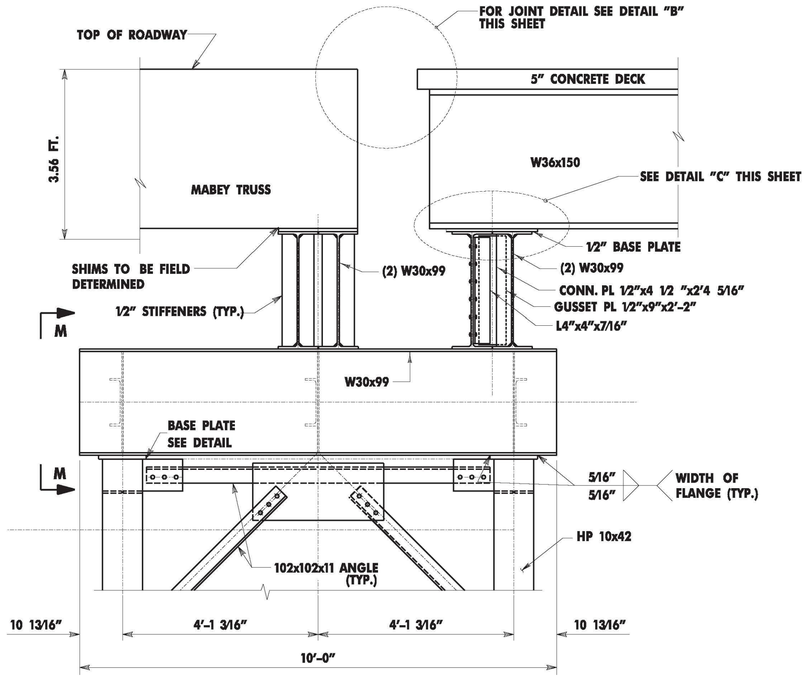

A / 12 PIER 2 SECTION

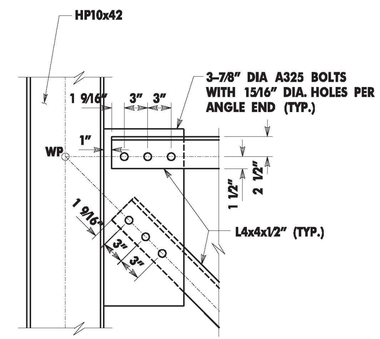

TYPICAL END CONNECTION DETAIL

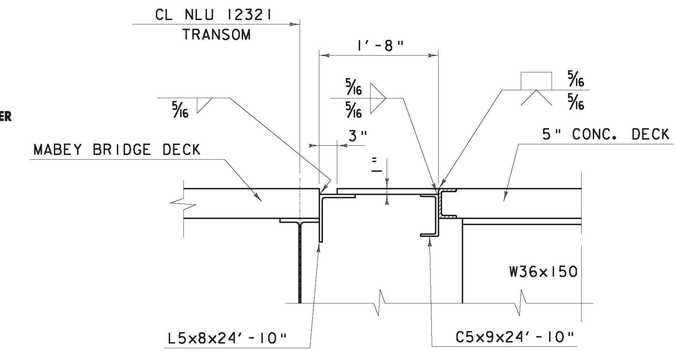

DETAIL "B"

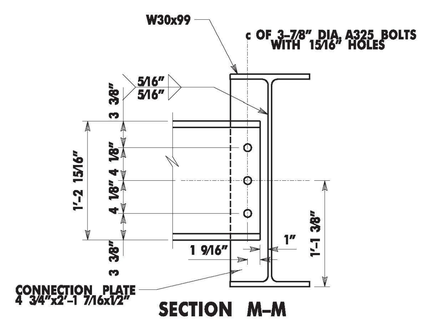

SECTION M-M

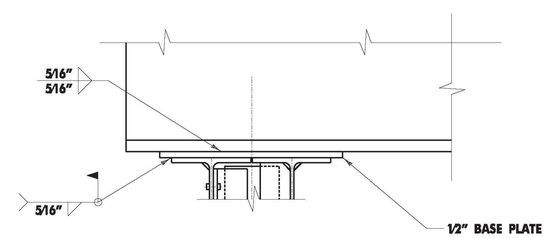

DETAIL "C"

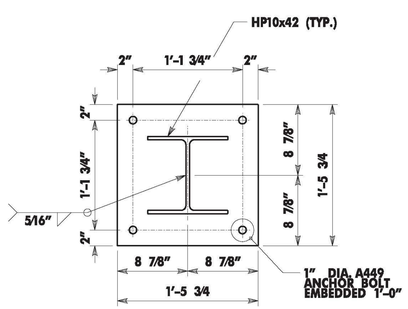

TYPICAL BASE PLATE DETAIL

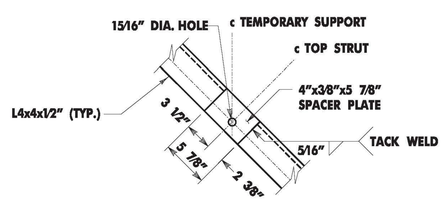

DETAIL "A"

TOWER DETAILS	PROJECT NAME: RICHMOND	
	PROJECT NUMBER: STP-RS 0284(11)	
	FILE NAME: z90c092 TMP TWR DET.dgn	PLOT DATE: 6/1/2011
	PROJECT LEADER: DJV	DRAWN BY: PKR
	DESIGNED BY: DJV	CHECKED BY: VC/KM
	DWG. NO.: 13	SHEET 13 OF XX

FILE NAME = s:\projects\any\k2\22876\cadd_msm\bridge work\vbs (1-15) temporary bridge\z98c092_TMP_TWR_DET.dgn
DATE/TIME = 6/1/2011
USER = 3293