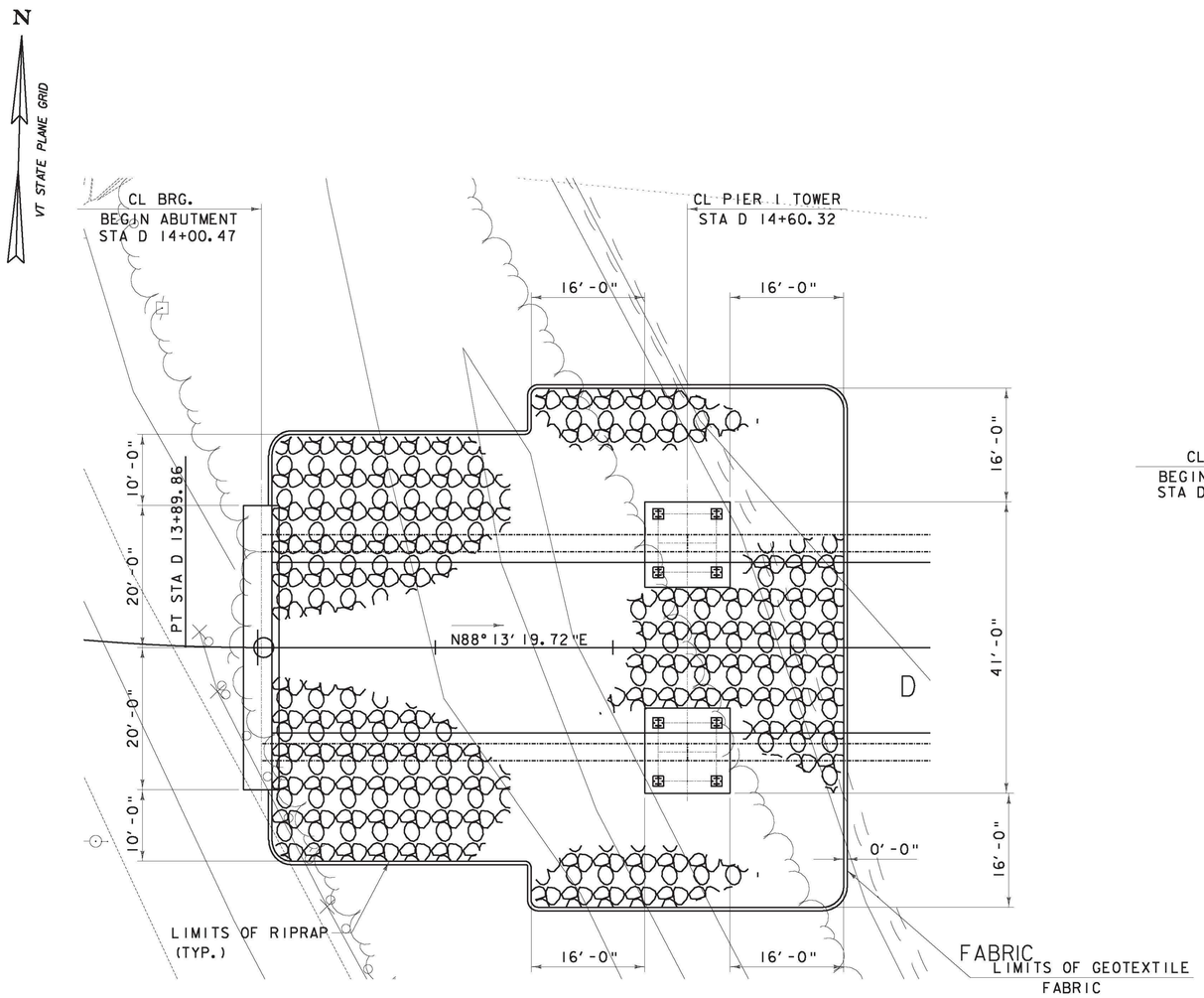

PLAN (SPAN 1)

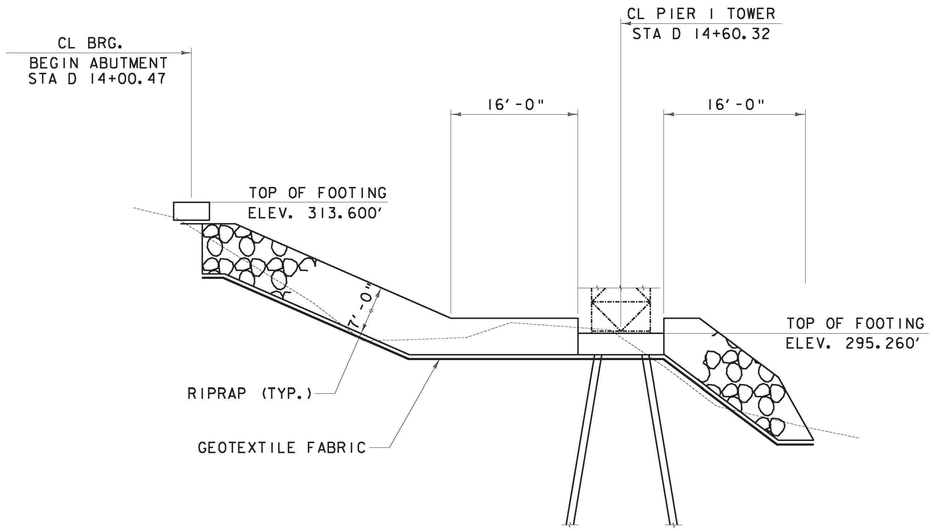

ELEVATION (SPAN 1)

NOTE
FOR SCOUR CALCULATIONS SEE WBS 1-10

SPAN 1 RIPRAP LIMIT PLAN	PROJECT NAME: RICHMOND	
	PROJECT NUMBER: STP-RS 0284(11)	
	FILE NAME: WEST FTG RIP RAP LIMIT.dgn PROJECT LEADER: DJV DESIGNED BY: DJV DWG. NO.: 11	PLOT DATE: 6/1/2011 DRAWN BY: PKR CHECKED BY: VC/KM SHEET 11 OF XX

FILE NAME = v:\projects\eng\k2\22076\cadd_msn\bridge work\wbs (1-15) temporary bridge\z98c092_WST RIPRAP .dgn
DATE/TIME = 6/1/2011
USER = 5293