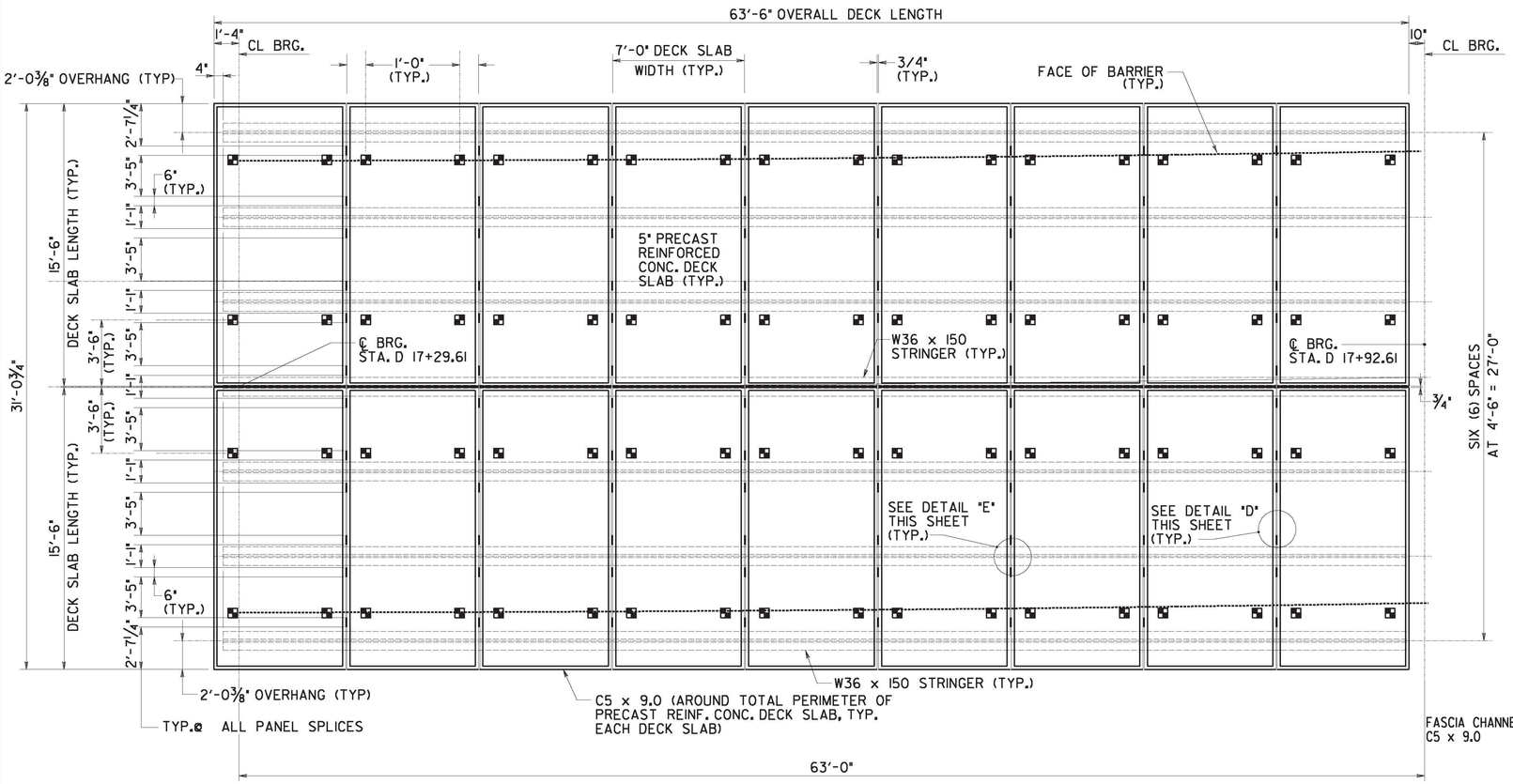

DECK SLAB LAYOUT
NOT TO SCALE

NOTE

■ - DENOTES LIFTING INSERT

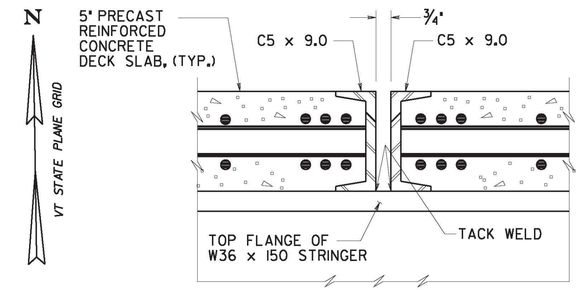

DETAIL "E"
TYPICAL SLAB TO STRINGER CONNECTION
NOT TO SCALE

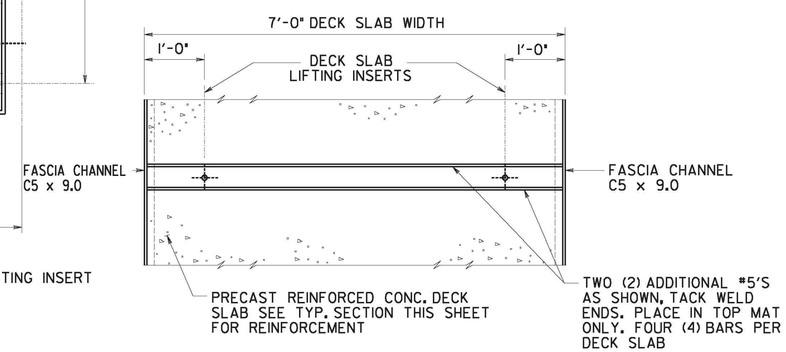

TYPICAL LIFTING INSERT DETAIL
NOT TO SCALE

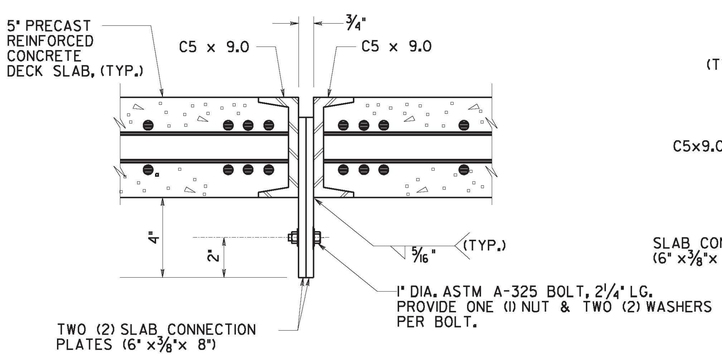

DETAIL "D"

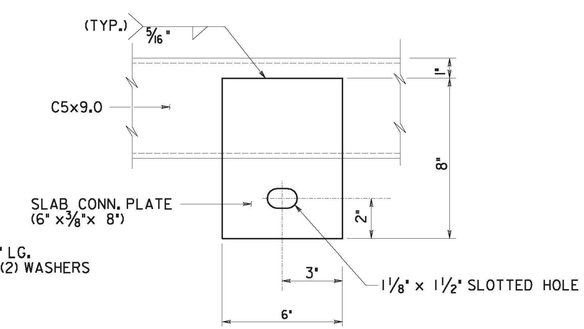

SLAB CONNECTION PLATE DETAIL

TYPICAL SLAB TO SLAB CONNECTION DETAILS
NOT TO SCALE

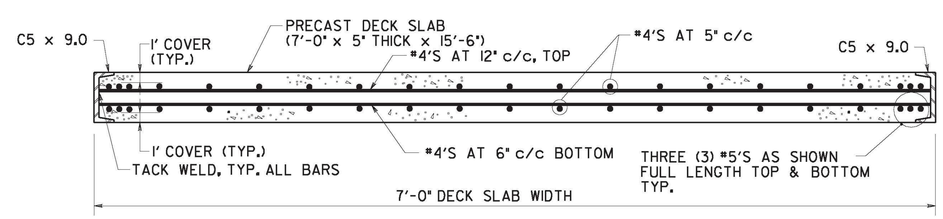

TYPICAL DECK SLAB SECTION
NOT TO SCALE

DECK LAYOUT PLAN	PROJECT NAME: RICHMOND	
	PROJECT NUMBER: STP-RS 0284(11)	
	FILE NAME: z90c092 TMP DECK.dgn	PLOT DATE: 6/1/2011
	PROJECT LEADER: DJV	DRAWN BY: PKR
	DESIGNED BY: DJV	CHECKED BY: VC/KM
	DWG. NO.: 8	SHEET 8 OF XX

FILE NAME = w:\projects\eng\k2\22876\cadd_mstn\bridge work\vbs (1-15) temporary bridge\z90c092_TMP_DECK.dgn
DATE/TIME = 6/1/2011
USER = 3213