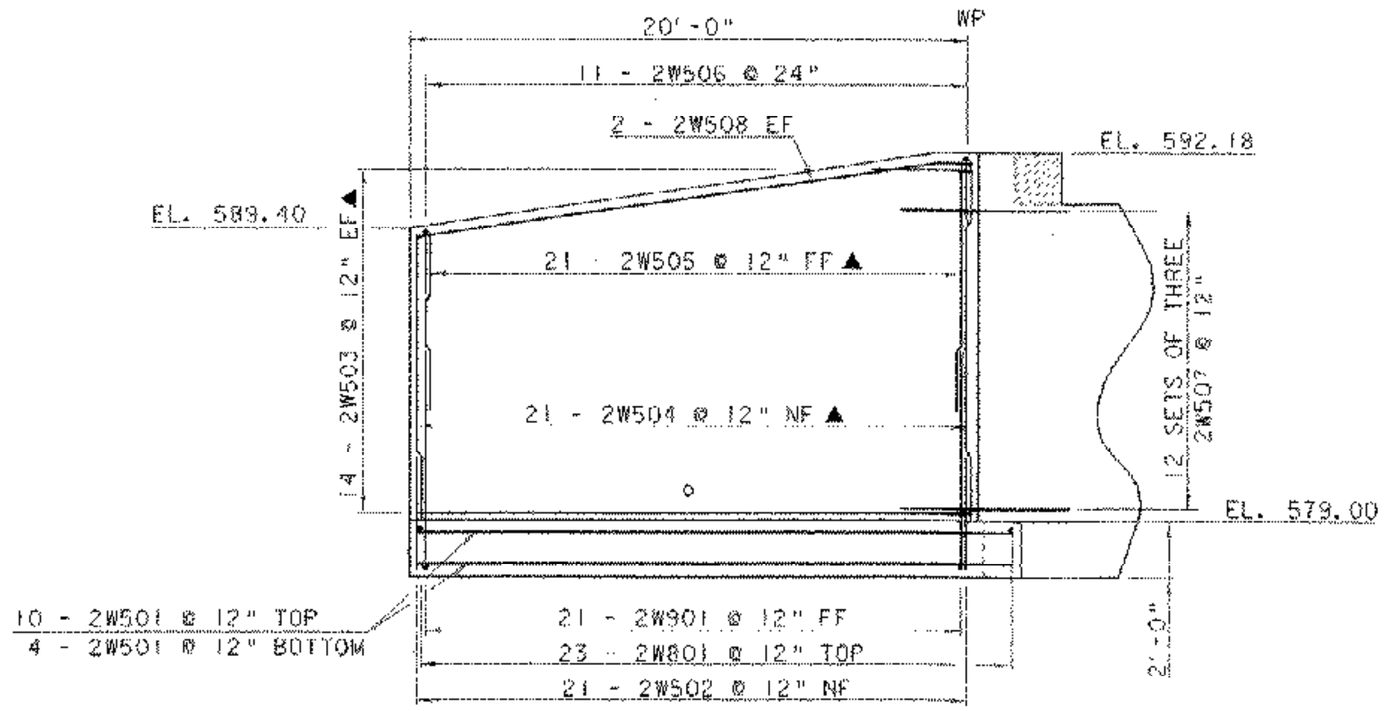

WINGWALL NO. 2 ELEVATION

1 0 1 2 3 4 5 6

SCALE: 1/4" = 1'-0"

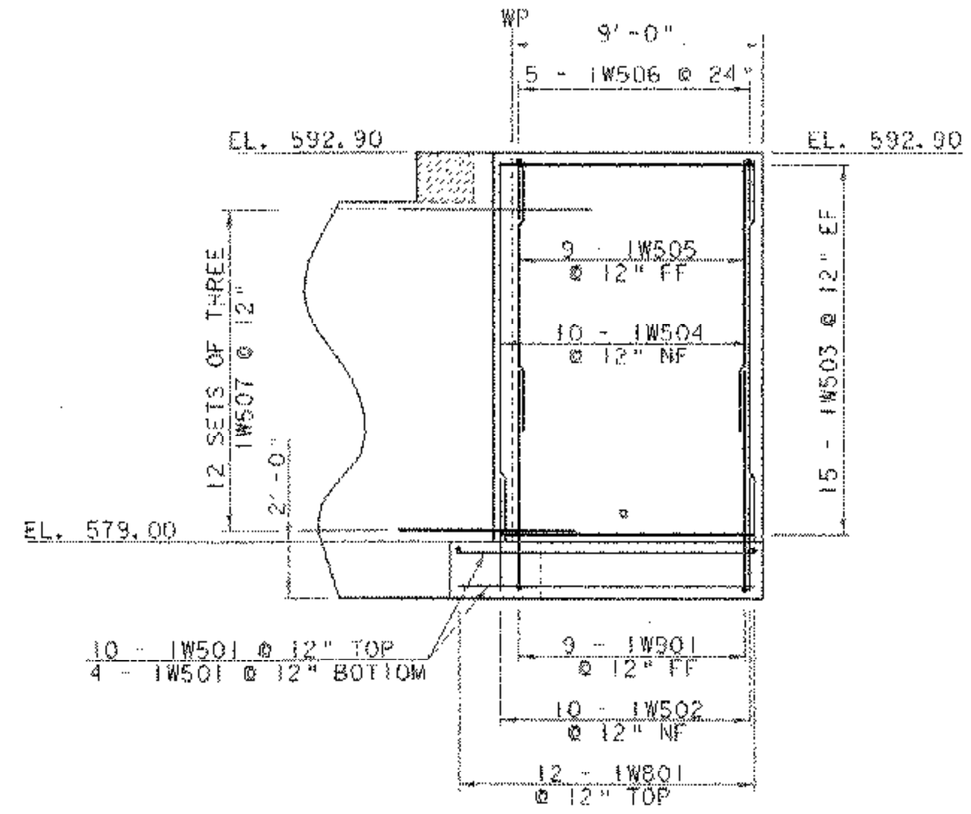

WINGWALL NO. 1 ELEVATION

1 0 1 2 3 4 5 6

SCALE: 1/4" = 1'-0"

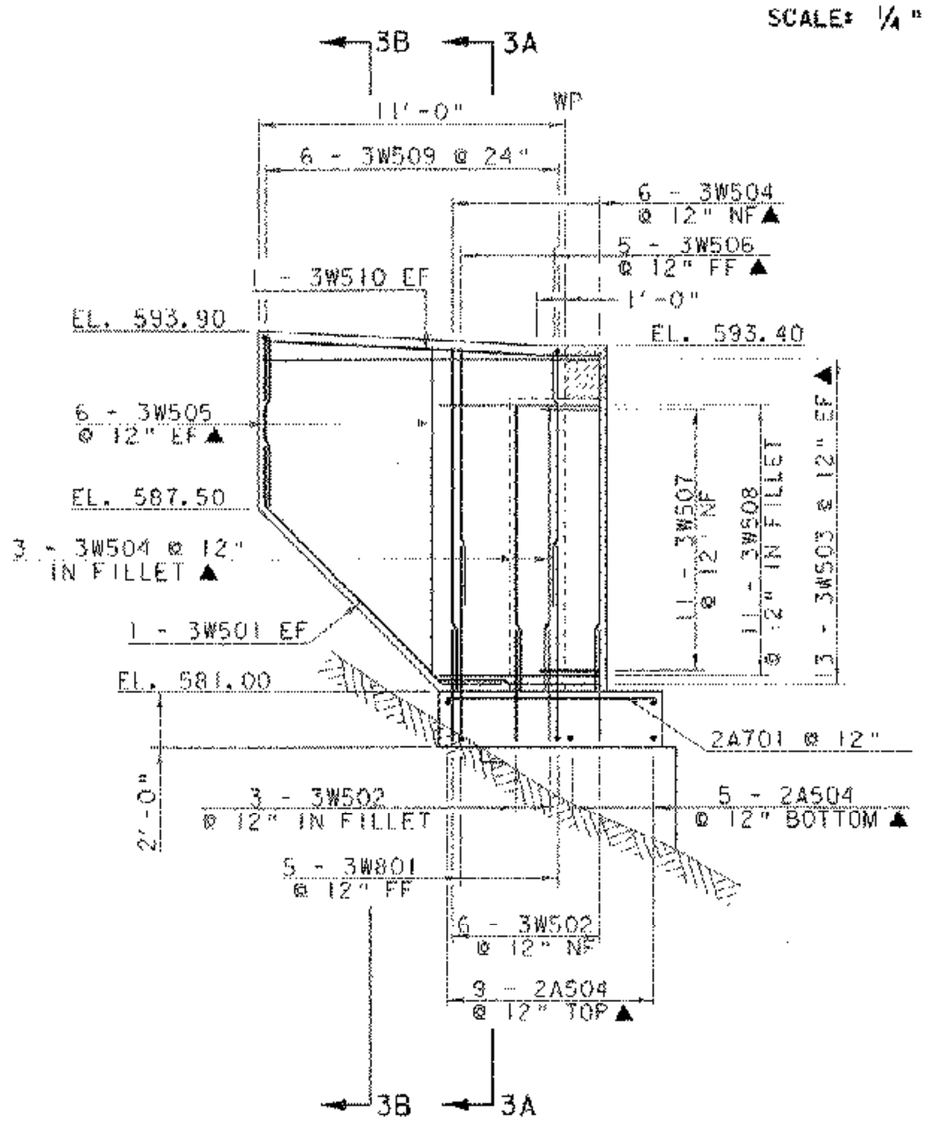

WINGWALL NO. 3 ELEVATION

1 0 1 2 3 4 5 6

SCALE: 1/4" = 1'-0"

APPROXIMATE LOCATION OF 18" RCP CLASS III PIPE TO BE VERIFIED IN THE FIELD BY THE RESIDENT ENGINEER.

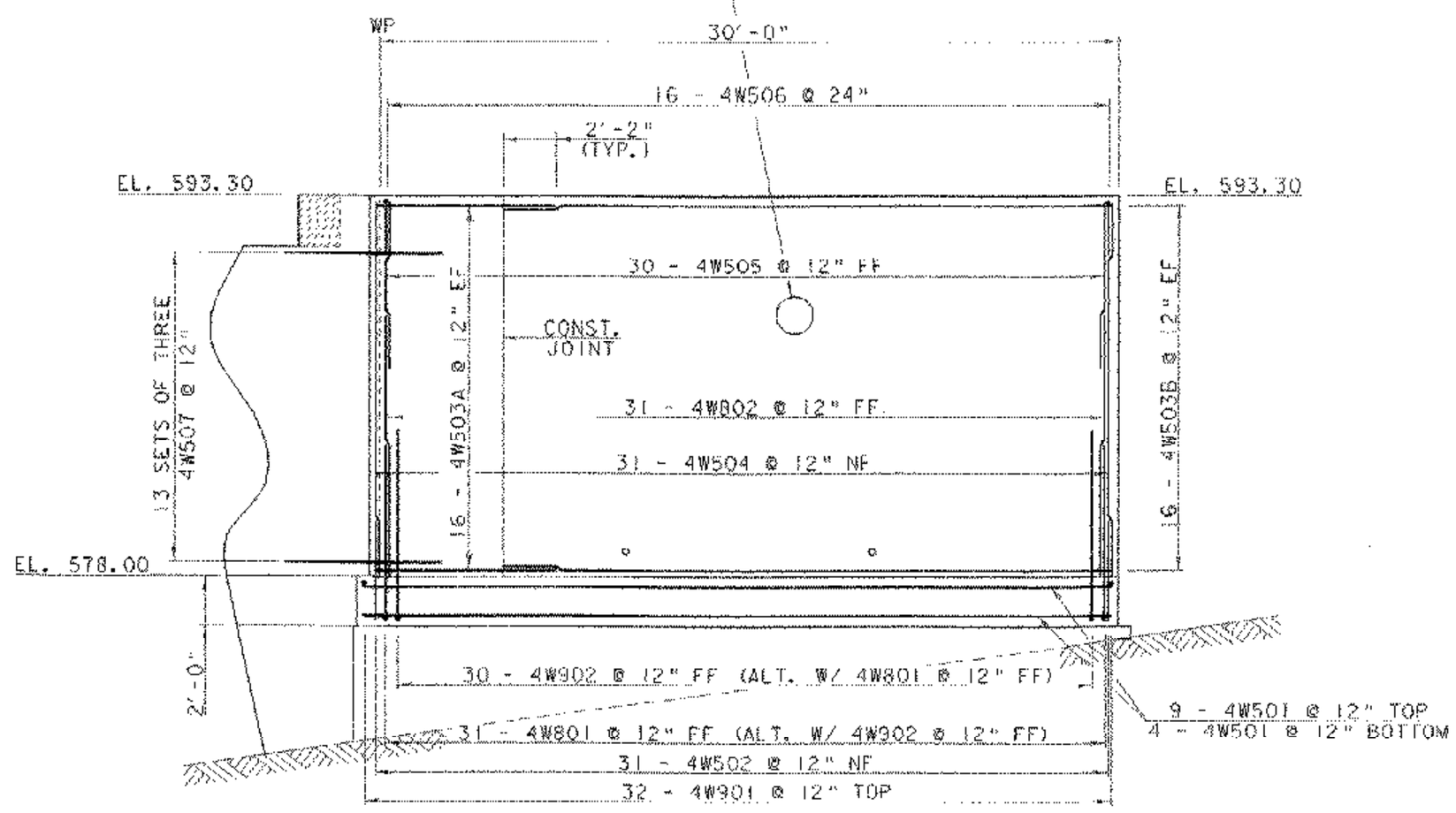

WINGWALL NO. 4 ELEVATION

1 0 1 2 3 4 5 6

SCALE: 1/4" = 1'-0"

CONSPAN PRECAST
CONCRETE WING WALLS USED
VALUE ENGINEERING
SEE PAGES 040 TO 088.

NOTE:

NF = NEAR FACE
FF = FAR FACE
EF = EACH FACE
▲ = CUT TO FIT IN FIELD
3" CLR. UNLESS OTHERWISE NOTED

WINGWALL DETAILS

PROJECT NAME: ROCKINGHAM	
PROJECT NUMBER: TH2 - 9103	
FILE NAME: 90c053\structures\sc053ww.i	PLOT DATE: 19-AUG-2003
PROJECT MANAGER: R.R. WHITCOMB	DRAWN BY: L. BULLOCK
DESIGNED BY: G. ROY	CHECKED BY: G. ROY
	SHEET 30 OF 38