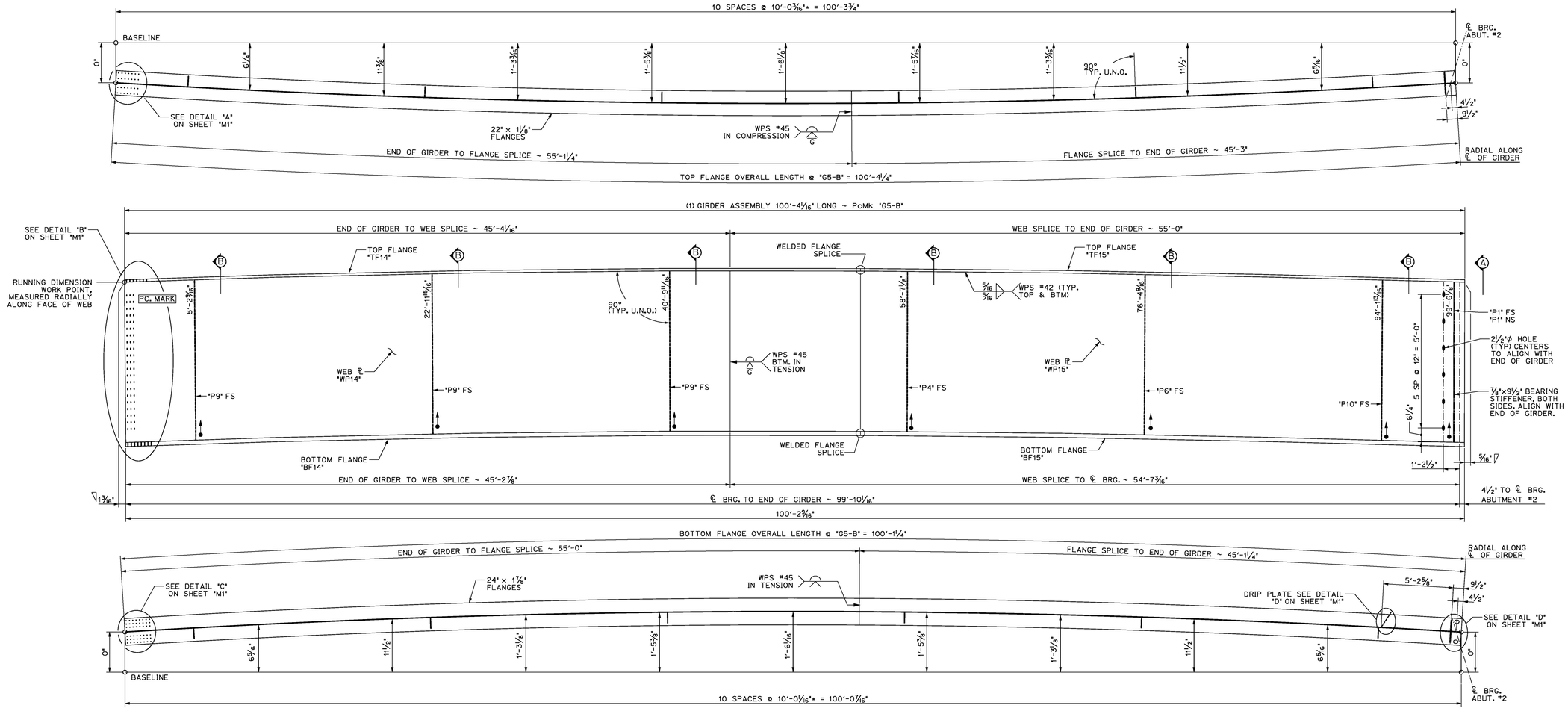

1/11 DIMENSIONAL PLANS & ELEVATIONS ~ GIRDER "G5-B"
HORIZONTAL SCALE: 1/4" = 1'-0"
VERTICAL SCALE EXAGGERATED 2:1

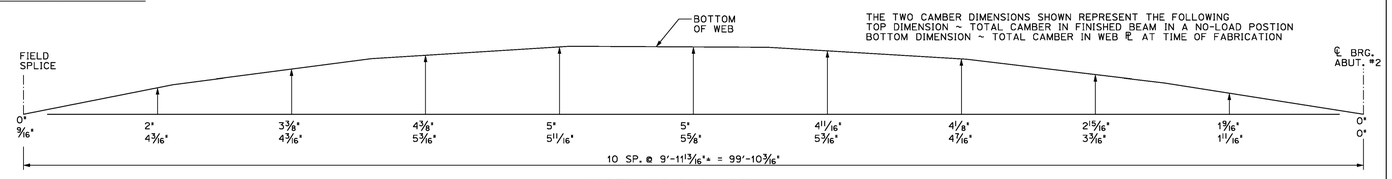

GIRDER "G5-B" CAMBER
N.T.S.

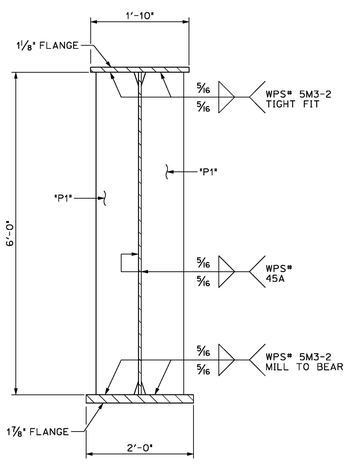

A/11 DIMENSIONAL SECTION
SCALE: 3/4" = 1'-0"

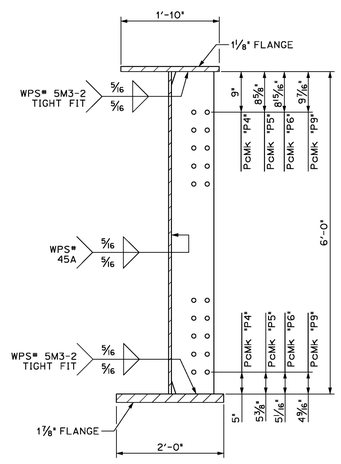

B/11 DIMENSIONAL SECTION
SCALE: 3/4" = 1'-0"

BILL OF MATERIALS

SHIP	SHIP MARK	NO. PCS.	PIECE MARK	DESCRIPTION	LENGTH	WT.	MATERIAL
1	G5-B			BRIDGE GIRDER ASSEMBLY	100'-4 1/16"	40500# EACH	
		1	WP14	ℙ 5/8" x 72"	45'-4 1/16"	7000# EACH	CVN
		1	WP15	ℙ 5/8" x 72"	55'-0"	8500# EACH	CVN
		1	TF14	ℙ 1 1/8" x 22"	55'-1 1/4"	4700# EACH	CVN
		1	TF15	ℙ 1 1/8" x 22"	45'-3"	3900# EACH	CVN
		1	BF14	ℙ 1 7/8" x 24"	55'0"	8500# EACH	CVN
		1	BF15	ℙ 1 7/8" x 24"	45'-1 1/4"	7000# EACH	CVN
		1	DP1	SEE SHEET M1			
		2	P1	SEE SHEET M2			
		1	P4	SEE SHEET M2			
		1	P6	SEE SHEET M2			
		3	P9	SEE SHEET M2			
		1	P10	SEE SHEET M2			

FINISH	N/A
MATERIAL	SEE DETAIL SHEETS
HOLES	
ELECTRODES	PER WELD PROCEDURE
WELDS	PER WELD PROCEDURE
SURFACE PREP	

NO	DATE	DESCRIPTION	BY

REVISIONS

ARC ENTERPRISES, INC.
ADVANCED RESOURCES & CONST. ENTERPRISES, INCORPORATED
P.O. BOX 120 KINGFIELD, ME. 04947
PHONE: (207) 265-2646 – FAX: (207) 265-4054

DRAFTER	DLM	GIRDER G5-B	PROJECT NO. 15-144
DATE	OCT. 2015	STOWE, VT. Route 108 (Major Collector) Bridge No. 3 Project No. BRF 0235(15)	
CHECKED	JJH		DWG. NO. 11
DATE	OCT. 2015	CC: CCS CONSTRUCTORS, INC.	