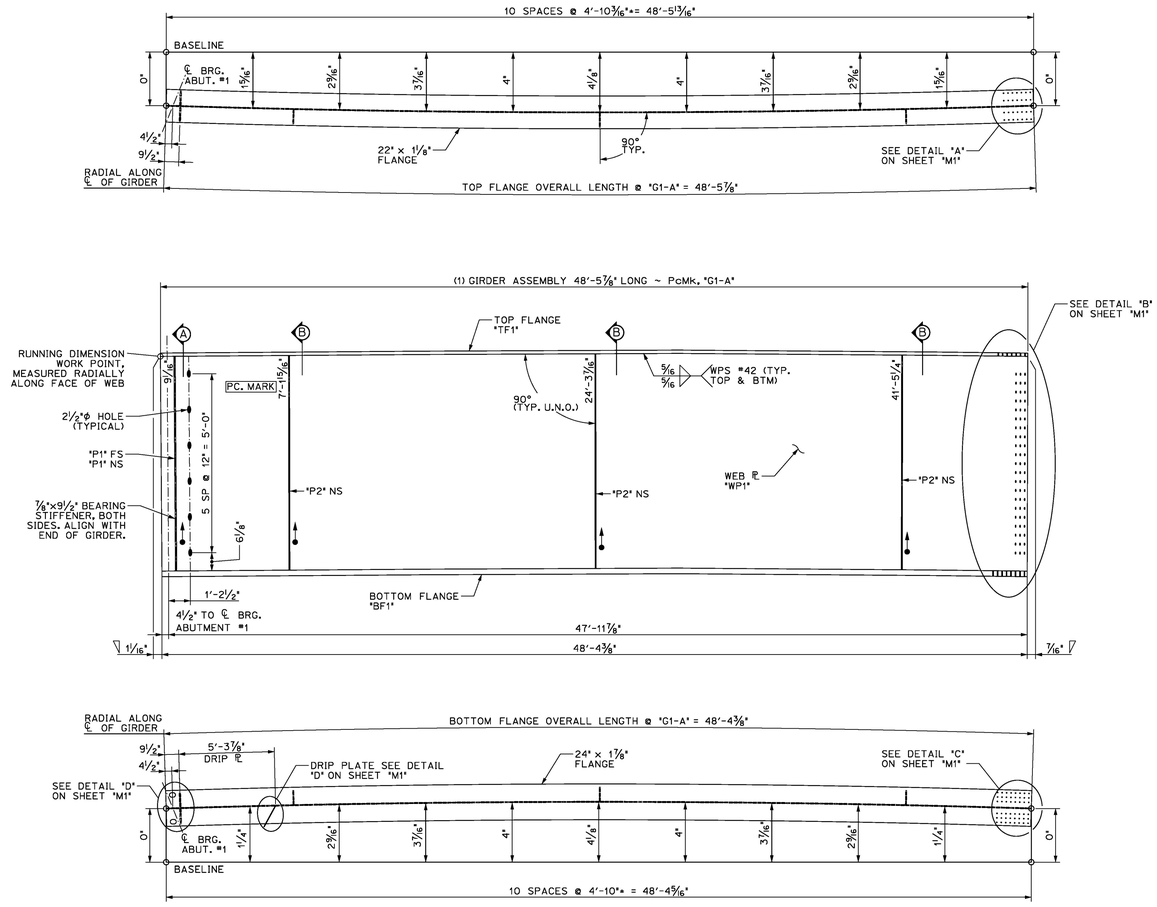

1/2 DIMENSIONAL PLANS & ELEVATIONS ~ GIRDER "G1-A"
HORIZONTAL SCALE: 1/4" = 1'-0"
VERTICAL SCALE EXAGGERATED 2:1

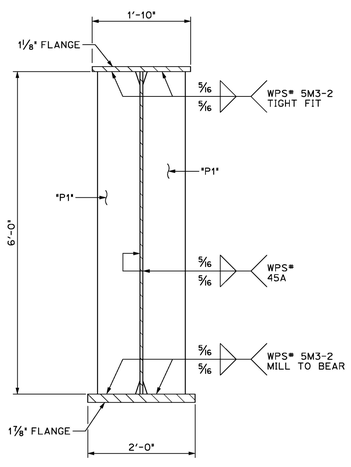

A/2 DIMENSIONAL SECTION
SCALE: 3/4" = 1'-0"

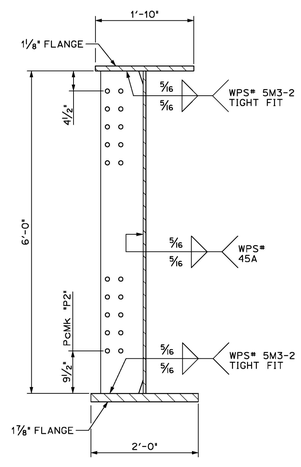

B/2 DIMENSIONAL SECTION
SCALE: 3/4" = 1'-0"

THE TWO CAMBER DIMENSIONS SHOWN REPRESENT THE FOLLOWING
TOP DIMENSION ~ TOTAL CAMBER IN FINISHED BEAM IN A NO-LOAD POSTION
BOTTOM DIMENSION ~ TOTAL CAMBER IN WEB ℄ AT TIME OF FABRICATION

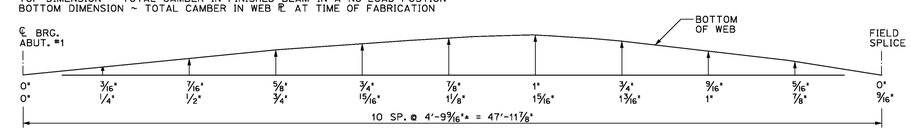

GIRDER "G1-A" CAMBER
N.T.S.

BILL OF MATERIALS

SHIP	SHIP MARK	NO. PCS.	PIECE MARK	DESCRIPTION	LENGTH	WT.	MATERIAL
1	G1-A			BRIDGE GIRDER ASSEMBLY	48'-5 7/8"	19800# EACH	
		1	WP1	ℙ 5/8" x 72"	48'-5 7/8"	7450# EACH	CVN
		1	TF1	ℙ 1 1/8" x 22"	48'-5 7/8"	4100# EACH	CVN
		1	BF1	ℙ 1 7/8" x 24"	48'-4 3/8"	7420# EACH	CVN
		1	DP1	SEE SHEET M1			
		2	P1	SEE SHEET M2			
		3	P2	SEE SHEET M2			

FINISH	N/A
MATERIAL	SEE DETAIL SHEETS
HOLES	
ELECTRODES	PER WELD PROCEDURE
WELDS	PER WELD PROCEDURE
SURFACE PREP	

NO	DATE	DESCRIPTION	BY

REVISIONS

ARC ENTERPRISES, INC.

ADVANCED RESOURCES & CONST. ENTERPRISES, INCORPORATED
P.O. BOX 120 KINGFIELD, ME. 04947
PHONE: (207) 265-2646 – FAX: (207) 265-4054

DRAFTER	DLM	GIRDER G1-A	PROJECT NO. 15-144
DATE	OCT. 2015	STOWE, VT. Route 108 (Major Collector) Bridge No. 3 Project No. BRF 0235(15)	
CHECKED	JJH		DWG. NO.
DATE	OCT. 2015	GC: CCS CONSTRUCTORS, INC.	2